GENERAL NOTES:

1. NAUTILUS ROLLING SHUTTER SYSTEM SHOWN ON THIS PRODUCT EVALUATION DOCUMENT (P.E.D.) HAS BEEN VERIFIED FOR COMPLIANCE IN ACCORDANCE WITH THE **2020** (7th EDITION) OF THE FLORIDA BUILDING CODE. NAUTILUS ROLLING SHUTTER SYSTEM SHALL NOT BE INSTALLED AT HIGH VELOCITY HURRICANE ZONES (MIAMI–DADE /BROWARD COUNTIES).

   DESIGN WIND LOADS SHALL BE DETERMINED AS PER SECTION **1609** OF THE ABOVE MENTIONED CODE, FOR A BASIC WIND SPEED AS REQUIRED BY THE JURISDICTION WHERE THESE SHUTTERS WILL BE INSTALLED FOR A DIRECTIONALITY FACTOR Kd=0.85. USING ASCE 7–16 FOR INSTALLATIONS UNDER 2020 FBC AND SHALL NOT EXCEED THE MAXIMUM (A.S.D.) DESIGN PRESSURE RATINGS INDICATED ON SHEETS 15 THRU 18 & 20 THRU 26. IN ORDER TO VERIFY THE ABOVE CONDITION, ULTIMATE DESIGN WIND LOADS DETERMINED PER ASCE 7–16 SHALL BE FIRST REDUCED TO A.S.D. DESIGN WIND LOADS BY MULTIPLYING THEM BY 0.6 IN ORDER TO TO COMPARE THESE W/ MAX. (A.S.D) DESIGN PRESSURE RATINGS INDICATED ON SHEETS 15 THRU 18 & 20 THRU 26.

2. IN ORDER TO VERIFY THAT COMPONENTS AND ANCHORS ON THIS P.E.D. AS TESTED WERE NOT OVER STRESSED, A 33% INCREASE IN ALLOWABLE STRESS FOR WIND LOADS WAS NOT USED IN THEIR ANALYSIS. FASTENERS SPACINGS TO WOOD HAVE BEEN DETERMINED IN ACCORDANCE WITH N.D.S. **2018**. NAUTILUS ROLLING SHUTTER SYSTEM'S ADEQUACY FOR IMPACT AND CYCLIC RESISTANCE HAS BEEN VERIFIED IN ACCORDANCE WITH SECTION 1609.1.2 OF THE ABOVE MENTIONED CODE AS AMERICAN TEST LAB OF SOUTH FLORIDA. REPORT # 1030.01–08 AS PER ASTM E 1996, E 1886 AND E 330 STANDARDS, QUALIFYING INSTALLATIONS FOR WIND ZONES 1, 2, 3 & 4, MISSILE TYPE D AND ONLY APPLICABLE TO BASIC PROTECTION INSTALLATIONS, AS DEFINED BY SECTIONS 6.2.1.1, 6.2.1.2 AND 8.3 OF ASTM E 1996 SEE SHEETS 19 & 20 FOR ADDITIONAL LIMITATIONS.

3. ALL ALUMINUM EXTRUSIONS SHALL BE 6063–T6 ALLOY (UNLESS OTHERWISE NOTED), SEE SHEET 2.

4. ALL SCREWS (EXCEPT END RETENTION SCREW Ⓒ) TO BE STAINLESS STEEL 304 OR 316 SERIES WITH 50 ksi YIELD STRENGTH AND 90 ksi TENSILE STRENGTH OR CORROSION RESISTANT COATED CARBON STEEL AS PER DIN 50018. ALL S.D.S. ARE TEK SCREWS MANUFACTURED BY ITW BUILDEX & SHALL COMPLY W/ FLORIDA BUILDING CODE SECTION 2411.3.3.4.

5. BOLTS TO BE ASTM A–307, GALVANIZED OR AISI 304 OR 316 SERIES STAINLESS STEEL WITH 36 ksi MINIMUM YIELD STRENGTH.

6. NAUTILUS ROLLING SHUTTER SYSTEM BEARS U.S. PATENTS #6,095,225 AND #7,409,980.

7. ANCHORS TO WALL FOR Ⓓ SIDE RAIL SHALL BE AS FOLLOWS:

   (A) TO EXISTING POURED CONCRETE: MIN. 3000 p.s.i. COMPRESSIVE STRENGTH.

   –5/16"ø TAPCON XL ANCHORS AS MANUFACTURED BY ITW BUILDEX, INC.
   –3/8"ø KWIK BOLT 3 ANCHORS AS MANUFACTURED BY HILTI, INC.

   A.1) MINIMUM EMBEDMENT INTO POURED CONCRETE SHALL BE:
   2 1/4" FOR 5/16"ø TAPCON XL ANCHORS & 2 1/2" FOR 3/8"ø KWIK BOLT 3 ANCHORS.
   NO EMBEDMENT INTO STUCCO SHALL BE CONSIDERED AS PART OF THE REQUIRED EMBEDMENT.

   A.2) MINIMUM EDGE DISTANCE (E.D.) INTO POURED CONCRETE SHALL BE:
   4" FOR 5/16"ø TAPCON XL ANCHORS & 5" FOR 3/8"ø KWIK BOLT 3 ANCHORS. EDGE DISTANCE IS BEYOND ANY FINISH MATERIAL.

   A.3) IN CASE THAT PRECAST STONE, PRECAST CONCRETE OR BRICK PANELS, VENEER OR PAVERS BE FOUND ON THE EXISTING WALL OR FLOOR, ANCHORS SHALL BE LONG ENOUGH TO REACH THE MAIN STRUCTURE BEHIND SUCH PANELS.

   (B) TO EXISTING GROUT FILLED CELL CONCRETE BLOCK WALL: ASTM C–90

   –5/16"ø TAPCON XL ANCHORS, AS MANUFACTURED BY ITW BUILDEX, INC.

   B.1) MINIMUM EMBEDMENT OF 5/16"ø TAPCON XL ANCHORS INTO THE GROUT FILLED CELL CONCRETE BLOCK UNIT SHALL BE 2 1/4".
   NO EMBEDMENT INTO STUCCO SHALL BE CONSIDERED AS PART OF THE REQUIRED EMBEDMENT.

   B.2) MINIMUM EDGE DISTANCE (E.D.) OF 5/16"ø TAPCON XL ANCHORS INTO GROUT FILLED CELL CONCRETE BLOCK SHALL BE 4". EDGE DISTANCE IS BEYOND ANY FINISH MATERIAL.

   B.3) IN CASE THAT PRECAST STONE, PRECAST CONCRETE OR BRICK PANELS, VENEER OR PAVERS BE FOUND ON THE EXISTING WALL OR FLOOR, ANCHORS SHALL BE LONG ENOUGH TO REACH THE MAIN STRUCTURE BEHIND SUCH PANELS.

   (C) TO EXISTING WOOD FRAME BUILDING: SPRUCE PINE–FIR–SOUTH (G–0.36), DOUGLAS–FIR–SOUTH (G=0.46) OR SOUTHERN PINE #2 W/ G = 0.55 MIN.

   –5/16"ø TAPCON XL ANCHORS, AS MANUFACTURED BY ITW BUILDEX, INC.

   C.1) MINIMUM EMBEDMENT OF TAPCON XL ANCHORS, INTO THE WOOD FRAME UNIT SHALL BE 2 1/4" PHYSICAL THREADED PENETRATION.
   NO EMBEDMENT INTO FINISH MATERIAL SHALL BE CONSIDERED AS PART OF THE REQUIRED EMBEDMENT.

   C.2) MINIMUM EDGE DISTANCE (E.D.) OF TAPCON ANCHORS, INTO WOOD SHALL BE 2 1/4". EDGE DISTANCE IS BEYOND ANY FINISH MATERIAL.

   C.3) IN CASE THAT PRECAST STONE, PRECAST CONCRETE OR BRICK PANELS, VENEER OR PAVERS BE FOUND ON THE EXISTING WALL OR FLOOR, ANCHORS SHALL BE LONG ENOUGH TO REACH THE MAIN STRUCTURE BEHIND SUCH PANELS.

8. ANCHORS SHALL BE INSTALLED FOLLOWING ALL OF THE RECOMMENDATIONS AND SPECIFICATIONS OF THE ANCHOR'S MANUFACTURER.

9. ANCHORS REQUIRED FOR STORM BARS CONNECTIONS SHALL BE AS SPECIFIED ON APPLICABLE SECTIONS SHOWN ON SHEET 9.

   –3/8"øx1 1/4" CALK–INS MANUFACTURED BY DEWALT, INC.
   –1/4"øx3/4" SOLID–SET MANUFACTURED BY ALL POINT, INC.
   –3/8"ø KWIK BOLT TZ MANUFACTURED BY HILTI, INC.
   –5/16"ø TAPCON MANUFACTURED BY ITW BUILDEX, INC

   MINIMUM EDGE DISTANCE AND SPACING FOR ABOVE MENTIONED ANCHORS SHALL BE AS INDICATED BELOW OR AT ABOVE MENTIONED SHEET. EDGE DISTANCE AND EMBEDMENTS ARE BEYOND ANY FINISH MATERIAL.

ANCHOR	SPACING @ 100%	EDGE DISTANCE @ 100%	EMBEDMENT CONCRETE	EMBEDMENT GROUT FILLED OR CONCRETE BLOCK
3/8"øx1 1/4" CALK–IN	3 3/4"	4 1/2"	1 1/4" (3000 psi)	NOT ALLOWED
1/4"øx3/4" SOLID–SET	3"	3"	7/8" (3000 psi)	NOT ALLOWED
3/8"ø KWIK BOLT TZ	9"	4"	2 1/2" (3000 psi)	NOT ALLOWED
5/16"ø TAPCON XL	3 3/4"	3 1/8"	2 1/4" (2899 psi)	NOT ALLOWED

10. ANCHORS REQUIRED FOR MULLION CONNECTIONS SHALL BE AS SPECIFIED ON APPLICABLE SECTIONS SHOWN ON SHEETS 10, 10A, 11, 11A, 12, 12A, 13 & 13A.

    –KWIK BOLT TZ EXPANSION ANCHOR MANUFACTURED BY HILTI, INC.
    –HUS–H SCREW ANCHOR MANUFACTURED BY HILTI, INC.
    –WEDGE–BOLT ANCHOR MANUFACTURED BY DEWALT, INC.

    MINIMUM EDGE DISTANCE AND SPACING FOR ABOVE MENTIONED ANCHORS SHALL BE AS INDICATED BELOW OR AT ABOVE MENTIONED SHEET. EDGE DISTANCE AND EMBEDMENTS ARE BEYOND ANY FINISH MATERIAL.

ANCHOR	SPACING @ 100%	EDGE DISTANCE @ 100%	EMBEDMENT @ 100% CONCRETE	EMBEDMENT @ 100% GROUT FILLED OR CONCRETE BLOCK
3/4"ø KWIK BOLT TZ	27"	9"	4 3/4" (3000 psi)	NOT ALLOWED
1/2"ø KWIK BOLT TZ	22 1/2"	7 1/2"	3 1/4" (3000 PSI)	NOT ALLOWED
3/8"ø KWIK BOLT TZ	6"	4 3/8"	2" (3000 PSI)	NOT ALLOWED
3/8"ø HUS–H SCREW	4"	5"	2" (3000 PSI)	NOT ALLOWED
3/8"ø WEDGE–BOLT	4 1/2"	4 1/2"	2 1/2" (3000 PSI)	NOT ALLOWED
1/2"ø HUS–H SCREW OR WEDGE BOLT	6"	6"	3" (3000 PSI)	NOT ALLOWED
5/8"ø HUS–H SCREW OR WEDGE BOLT	7 1/2"	7 1/2"	2 1/2" (3000 PSI)	NOT ALLOWED

11. THE INSTALLATION CONTRACTOR IS TO SEAL/CAULK ALL PRODUCT COMPONENT EDGES WHICH REMAIN IN CONTINUOUS CONTACT WITH THE BUILDING TO PREVENT WIND/RAIN INTRUSION. CAULK AND SEAL PRODUCT TRACKS ALL AROUND FULL LENGTH.

12. IT SHALL BE THE RESPONSIBILITY OF THE CONTRACTOR TO VERIFY THE SOUNDNESS OF THE STRUCTURE WHERE PRODUCT IS TO BE ATTACHED TO INSURE PROPER ANCHORAGE. THIS PRODUCT SHALL ONLY BE ATTACHED TO CONCRETE, CONCRETE BLOCK OR WOOD FRAME BUILDINGS.

13. THIS PRODUCT'S INSTALLATION SHALL COMPLY WITH ALL SPECS INDICATED IN THIS DRAWING PLUS ANY BUILDING AND ZONING REGULATIONS PROVIDED BY THE JURISDICTION WHERE PERMIT IS APPLIED TO.

14. LIFTING MECHANISM NOT PART OF THIS APPROVAL.

15. (a) THIS P.E.D. PREPARED BY THIS ENGINEER IS GENERIC AND DOES NOT PROVIDE INFORMATION FOR A SITE SPECIFIC PROJECT; i.e. WHERE THE SITE CONDITIONS DEVIATE FROM THE P.E.D.

    (b) CONTRACTOR TO BE RESPONSIBLE FOR THE SELECTION, PURCHASE AND INSTALLATION INCLUDING LIFE SAFETY OF THIS PRODUCT, BASED ON THIS P.E.D. PROVIDED HE/SHE DOES NOT DEVIATE FROM THE CONDITIONS DETAILED ON THIS DOCUMENT. CONSTRUCTION SAFETY AT SITE IS THE CONTRACTOR'S RESPONSIBILITY.

    (c) THIS P.E.D. WILL BE CONSIDERED INVALID IF ALTERED BY ANY MEANS.

    (d) SITE SPECIFIC PROJECTS SHALL BE PREPARED BY A FLORIDA REGISTERED ENGINEER OR ARCHITECT WHICH WILL BECOME THE ENGINEER OF RECORD (E.O.R.) FOR THE PROJECT AND WHO WILL BE RESPONSIBLE FOR THE PROPER USE OF THE P.E.D. ENGINEER OF RECORD, ACTING AS A DELEGATED ENGINEER TO THE P.E.D. ENGINEER, SHALL SUBMIT TO THIS LATTER THE SITE SPECIFIC DRAWINGS FOR REVIEW.

    (e) THIS P.E.D. SHALL BEAR THE DATE AND ORIGINAL SEAL AND SIGNATURE OF THE PROFESSIONAL ENGINEER OF RECORD THAT PREPARED IT.

16. PRODUCT MANUFACTURER'S LABEL SHALL BE LOCATED ON A READILY VISIBLE LOCATION AT PRODUCT IN ACCORDANCE WITH SECTION 1709.9.3 OF FLORIDA BUILDING CODE. ONE LABEL SHALL BE PLACED FOR EVERY OPENING. LABELING TO COMPLY WITH SECTION 1709.9.2 OF THE FLORIDA BUILDING CODE.

THIS DRAWING SHALL ONLY BE USED TO OBTAIN PERMITS IN THE STATE OF FLORIDA

FLORIDA BUILDING CODE (Non High Velocity Hurricane Zone)

WALTER A. TILLIT JR. LICENSE No. 44167 STATE OF FLORIDA PROFESSIONAL ENGINEER

6/1/2020

SEAL/SIGNATURE/DATE

© 2020 TILTECO INC.

TILTECO INC.
TILLIT TESTING & ENGINEERING COMPANY
6355 N.W. 36th. St., Ste. 305, VIRGINIA GARDENS, Fl. 33166
Phone : (305)871–1530 . Fax : (305)871–1531
e–mail: tilteco@aol.com
CA–0006719
WALTER A. TILLIT Jr. P.E.
FLORIDA Lic. # 44167

Nautilus
Rolling Shutter System

EXPERT SHUTTER SERVICES INC.
668 S.W. WHITMORE DRIVE
PORT ST. LUCIE, FL. 34984
PHONE: (800) 749–9056 , FAX: (772) 871–0990

REV. No	DESCRIPTION	DATE	REV. No	DESCRIPTION	DATE
1	OLD 17–244	06/8/2020	4		
2			5		

DRAWN BY: M.P.

06/8/2020 DATE

20–064 DRAWING No

SHEET 1 OF 26

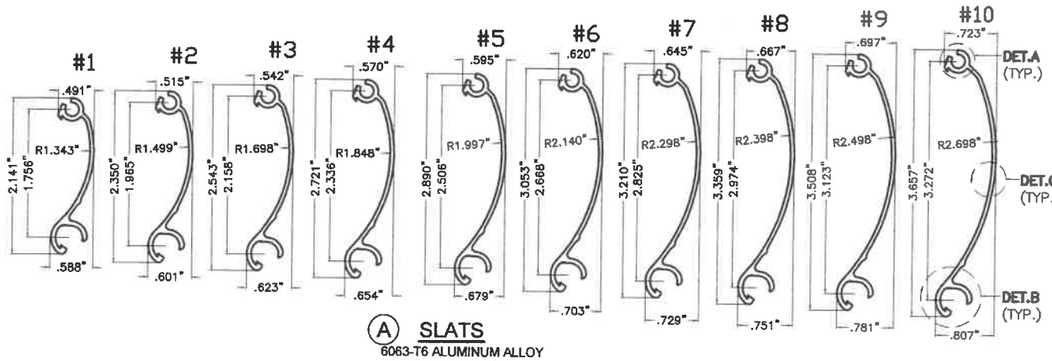

(A) SLATS
6063-T6 ALUMINUM ALLOY
Fy= 31.5 ksi (min.)
SCALE: 1/2" = 1"

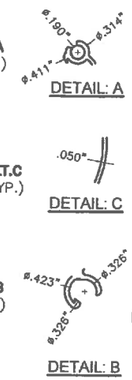

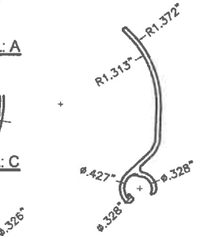

(A1) STARTER SLAT
6063-T6 ALUMINUM ALLOY
SCALE: 1/2" = 1"

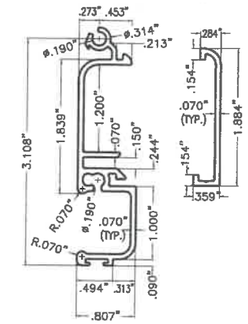

(B) BASE SLAT
6063-T6 ALUMINUM ALLOY
SCALE: 1/2" = 1"

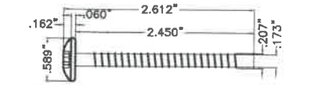

TRUSS HEAD T40 SIX LOBE THREAD 410HT SCREW **

OPTION #1 (MONOLITHIC)

#12 (5/16") HEX HEAD AB THREAD 410HT SCREW **

OPTION #2 (W/ WASHER)

** SCREW SPECS:
410HT STAINLESS STEEL SCREW COATED WITH AC-SILVER CHROMED-FREE ANTI-CORROSION COATING SYSTEM, AS MANUFACTURED BY SUN BELT COATING, LLC
Fy = 191.4 ksi (YIELD STRENGTH),
Ftu = 196.8 ksi (TENSILE STRENGTH)

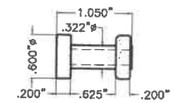

ACETAL BUSHING ***
(USE W/ OPTIONS #1 AND #2)

*** BUSHING SPECS:
DENSITY: 1.4 g/cm³
TENSILE MODULUS: 377 ksi
TENSILE STRESS AT YIELD: 9.135 ksi
FLEXURAL MODULUS: 580 ksi
IZOD NOTCHED IMPACT: 6.5 kJ/m²

(C) RETAINING SYSTEM: SCREW + BUSHING
SCALE: 1/2" = 1"

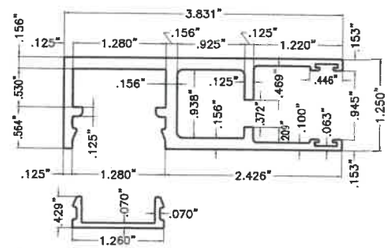

(D) SIDE RAIL *
6063-T6 ALUMINUM ALLOY
SCALE: 1/2" = 1"

* MUST BE REVIEWED BY SHUTTER MANUFACTURER TO ALLOW FOR A MINIMUM 0.050" CLEARANCE BETWEEN SCREW HEAD AND CAVITY WALL AT NON HURRICANE POSITIONS.

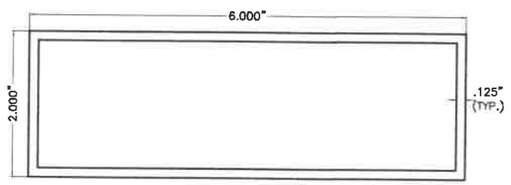

(E) BUILD-OUT TUBE
6063-T6 ALUMINUM ALLOY
SCALE: 1/2" = 1"

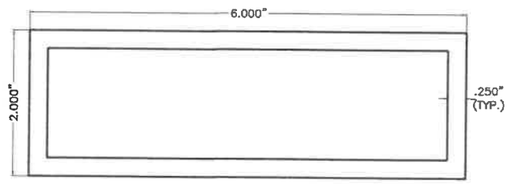

(E1) BUILD-OUT TUBE
6063-T6 ALUMINUM ALLOY
SCALE: 1/2" = 1"

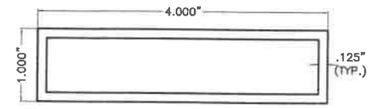

(E2) BUILD-OUT TUBE
6063-T6 ALUMINUM ALLOY
SCALE: 1/2" = 1"

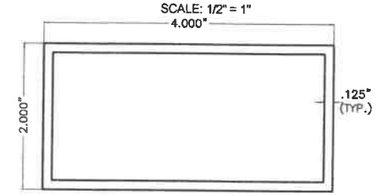

(E3) BUILD-OUT TUBE
6063-T6 ALUMINUM ALLOY
SCALE: 1/2" = 1"

(H) 1/4"Øx3/4" ITW/BUILDEX TEK SCREW
CARBON STEEL
SCALE: 1/2" = 1"

(I) 5/16"Ø ITW/BUILDEX TAPCON XL ANCHOR
CARBON STEEL
SCALE: 1/2" = 1"

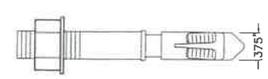

(J) 3/8"Ø HILTI, INC. KWIK BOLT 3 ANCHOR
CARBON STEEL
SCALE: 1/2" = 1"

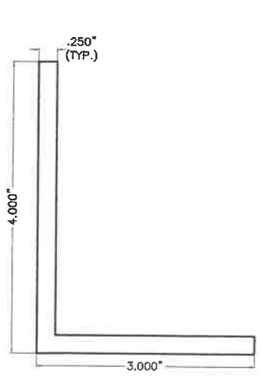

(F) TRAPPED ANGLE
6063-T6 ALUMINUM ALLOY
SCALE: 1/2" = 1"

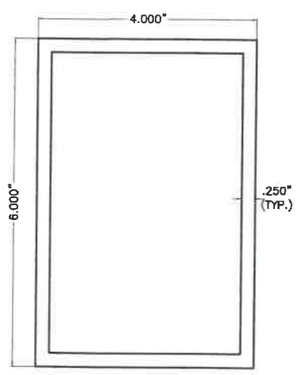

(G) 4x6 MULLION
6061-T6 ALUMINUM ALLOY
SCALE: 3/8" = 1"

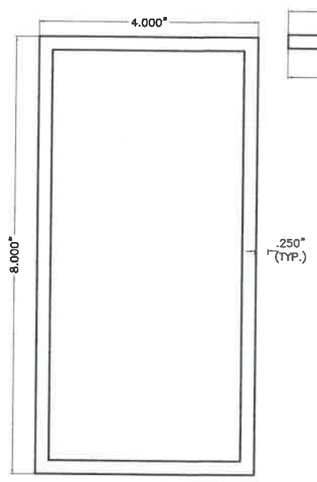

(G1) 4x8 MULLION
6061-T6 ALUMINUM ALLOY
SCALE: 3/8" = 1"

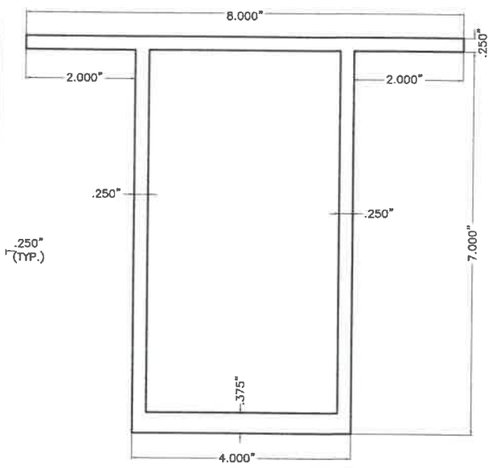

(G2) 4x7 MULLION
6061-T6 ALUMINUM ALLOY
SCALE: 3/8" = 1"

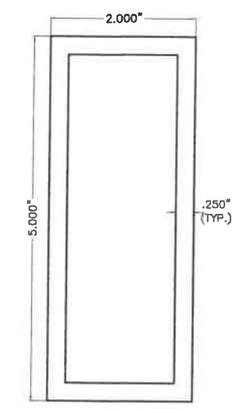

(K) STORM BAR
6061-T6 ALUMINUM ALLOY
SCALE: 1/2" = 1"

FLORIDA BUILDING CODE (Non High Velocity Hurricane Zone)

COMPONENTS

WALTER A. TILLIT JR. LICENSE No. 44167 STATE OF FLORIDA PROFESSIONAL ENGINEER

6/11/2020
SEAL/SIGNATURE/DATE

© 2020 TILTECO INC.

TILTECO INC.
TILLIT TESTING & ENGINEERING COMPANY
6355 N.W. 36th. St., Ste. 305, VIRGINIA GARDENS, FL 33166
Phone : (305)871-1530 . Fax : (305)871-1531
e-mail: tilteco@aol.com
CA-0006719
WALTER A. TILLIT Jr. P.E.
FLORIDA Lic. # 44167

Nautilus
Rolling Shutter System

EXPERT SHUTTER SERVICES INC.
668 S.W. WHITMORE DRIVE
PORT ST. LUCIE, FL. 34984
PHONE: (800) 749-9056 , FAX: (772) 871-0990

REV. No	DESCRIPTION	DATE	REV. No	DESCRIPTION	DATE
1	OLD 17-244	06/8/2020	4		
2			5		

DRAWN BY: M.P.
06/8/2020 DATE
20-064 DRAWING No
SHEET 2 OF 26

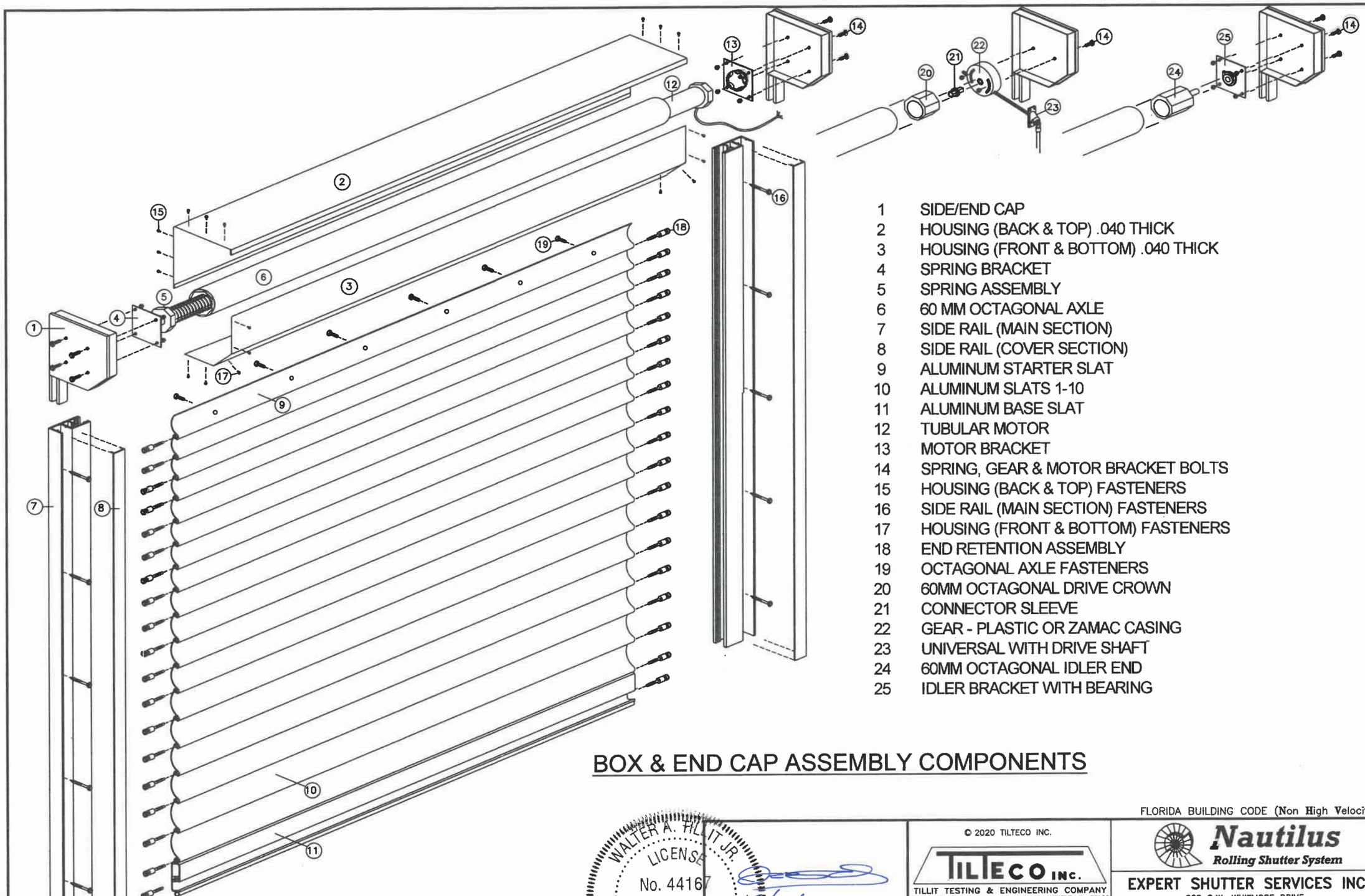

1 SIDE/END CAP
2 HOUSING (BACK & TOP) .040 THICK
3 HOUSING (FRONT & BOTTOM) .040 THICK
4 SPRING BRACKET
5 SPRING ASSEMBLY
6 60 MM OCTAGONAL AXLE
7 SIDE RAIL (MAIN SECTION)
8 SIDE RAIL (COVER SECTION)
9 ALUMINUM STARTER SLAT
10 ALUMINUM SLATS 1-10
11 ALUMINUM BASE SLAT
12 TUBULAR MOTOR
13 MOTOR BRACKET
14 SPRING, GEAR & MOTOR BRACKET BOLTS
15 HOUSING (BACK & TOP) FASTENERS
16 SIDE RAIL (MAIN SECTION) FASTENERS
17 HOUSING (FRONT & BOTTOM) FASTENERS
18 END RETENTION ASSEMBLY
19 OCTAGONAL AXLE FASTENERS
20 60MM OCTAGONAL DRIVE CROWN
21 CONNECTOR SLEEVE
22 GEAR - PLASTIC OR ZAMAC CASING
23 UNIVERSAL WITH DRIVE SHAFT
24 60MM OCTAGONAL IDLER END
25 IDLER BRACKET WITH BEARING

BOX & END CAP ASSEMBLY COMPONENTS

FLORIDA BUILDING CODE (Non High Velocity Hurricane Zone)

WALTER A. TILLIT JR. LICENSE No. 44167 STATE OF FLORIDA PROFESSIONAL ENGINEER

6/11/2020

SEAL/SIGNATURE/DATE

© 2020 TILTECO INC.

TILTECO INC.
TILLIT TESTING & ENGINEERING COMPANY
6355 N.W. 36th. St., Ste. 305, VIRGINIA GARDENS, Fl. 33166
Phone : (305)871-1530 . Fax : (305)871-1531
e-mail: tilteco@aol.com
CA-0006719
WALTER A. TILLIT Jr. P.E.
FLORIDA Lic. # 44167

Nautilus
Rolling Shutter System

EXPERT SHUTTER SERVICES INC.
668 S.W. WHITMORE DRIVE
PORT ST. LUCIE, FL. 34984
PHONE: (800) 749-9056 , FAX: (772) 871-0990

REV. No	DESCRIPTION	DATE	REV. No	DESCRIPTION	DATE
1	OLD 17-244	06/8/2020	4		
2			5		

DRAWN BY: M.P.
06/8/2020 DATE
20-064 DRAWING No
SHEET 3 OF 26

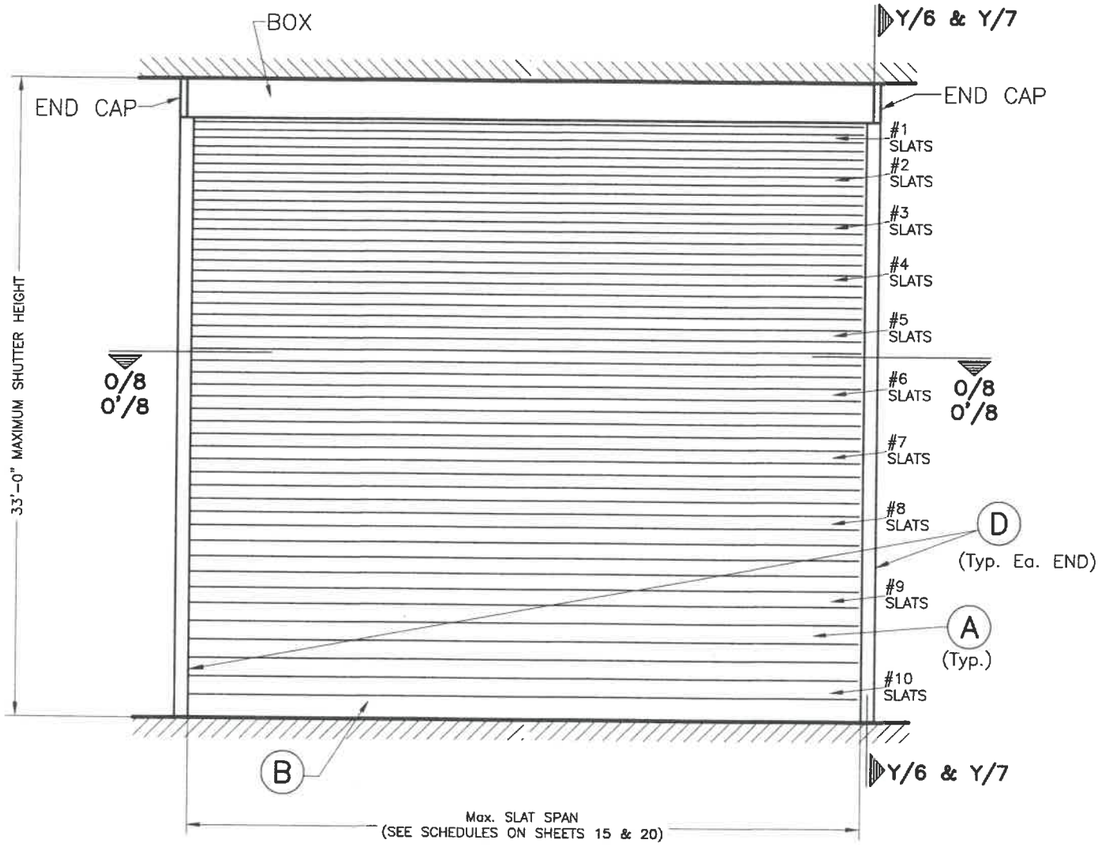

TYPICAL SINGLE UNIT ELEVATION W/O STORM BARS *, **

NOTE: SEE SHEETS 2 & 3 FOR COMPONENTS NOMENCLATURE.

N.T.S.

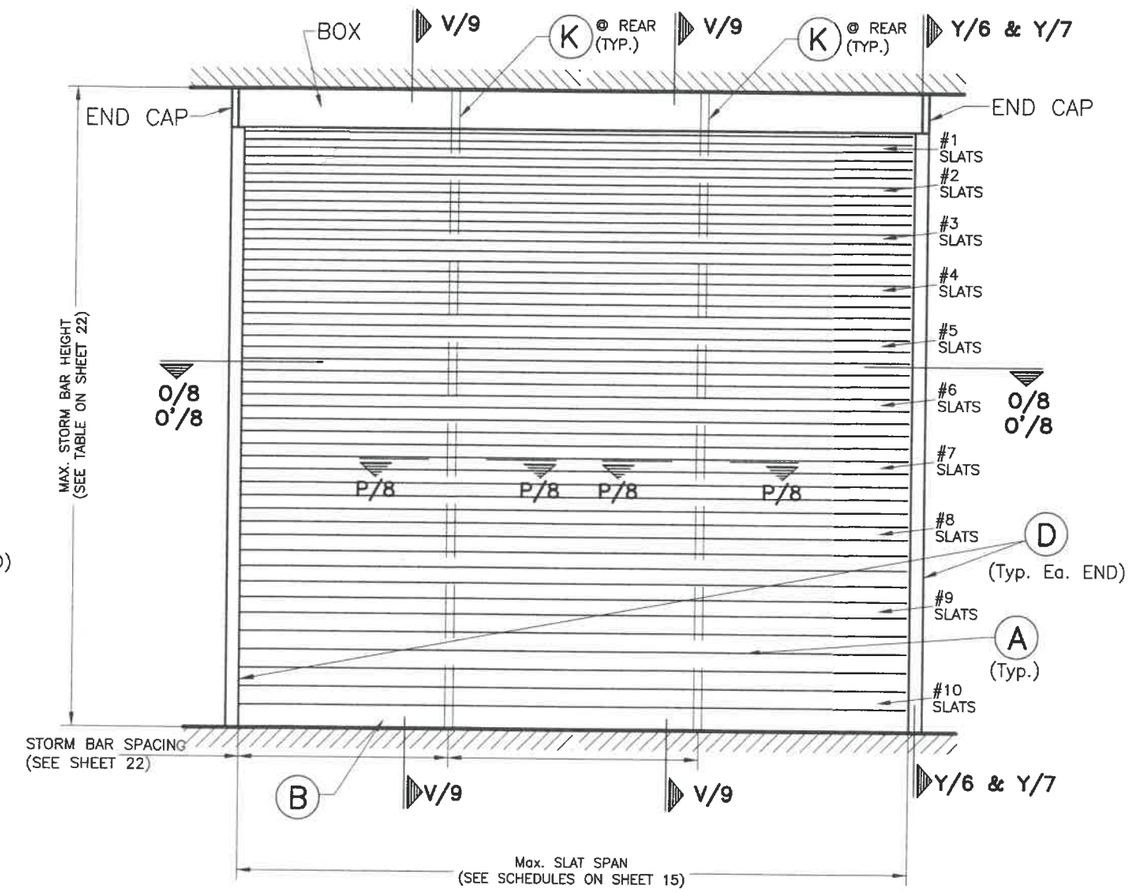

TYPICAL SINGLE UNIT ELEVATION W/ STORM BARS *

NOTE: SEE SHEETS 2 & 3 FOR COMPONENTS NOMENCLATURE.

N.T.S.

PROCEDURE FOR SLAT INSTALLATION GIVEN A SHUTTER HEIGHT:

* **CASE 1:** SHUTTER HEIGHT EQUAL OR LESS THAN 11'-0" APPLICABLE TO INSTALLATIONS W/O STORM BARS, W/ STORM BARS OR W/ STORM BARS & MULLIONS W/ HEIGHTS UP TO 11'-0".

(a) CURTAIN SHALL START W/ #1 SLATS AT TOP, FOLLOWED BY #2, #3, ... THEREAFTER, ALL THE WAY DOWN. EACH SLAT # SHALL CONSIST OF MIN. FIVE (5) SLATS OF THAT SLAT NUMBER. PROCEDURE FOR ADDING SLATS DOWNWARD BELOW #1 SLAT SHALL BE CONTINUED UNTIL TOTAL SHUTTER HEIGHT IS COMPLETED. QUANTITY OF FINAL SLAT NUMBER INSTALLED BEFORE BOTTOM SLAT (B) MAY VARY WITH SHUTTER'S HEIGHT.

(b) BOTTOM SLAT (B) MUST BE ALWAYS INSTALLED.

** **CASE 2:** SHUTTER HEIGHT LARGER THAN 11'-0" APPLICABLE TO INSTALLATIONS W/O STORM BARS AND W/ OR W/O MULLIONS W/ HEIGHTS LARGER THAN 11'-0".

(a) CURTAIN SHALL START W/ #1 SLATS AT TOP, FOLLOWED BY #2, #3, ... THEREAFTER, ALL THE WAY DOWN. EACH SLAT # SHALL CONSIST OF MIN. FIVE (5) SLATS OF THAT SLAT NUMBER. PROCEDURE FOR ADDING SLATS DOWNWARD BELOW #1 SLAT SHALL BE CONTINUED UNTIL #10 SLAT IS INSTALLED. AFTER #10 SLAT IS INSTALLED, ADDITIONAL #10 SLATS MUST BE USED TO COMPLETE THE TOTAL SHUTTER HEIGHT.

(b) BOTTOM SLAT (B) MUST BE ALWAYS INSTALLED.

FLORIDA BUILDING CODE (Non High Velocity Hurricane Zone)

WALTER A. TILLIT JR. LICENSE No. 44167 STATE OF FLORIDA PROFESSIONAL ENGINEER

6/11/2020

P.E. SEAL/SIGNATURE/DATE

© 2020 TILTECO INC.

TILTECO INC.
TILLIT TESTING & ENGINEERING COMPANY
6355 N.W. 36th. St., Ste. 305, VIRGINIA GARDENS, Fl. 33166
Phone : (305)871-1530 . Fax : (305)871-1531
e-mail: tilteco@aol.com
CA-0006719
WALTER A. TILLIT Jr. P.E.
FLORIDA Lic. # 44167

Nautilus
Rolling Shutter System

EXPERT SHUTTER SERVICES INC.
668 S.W. WHITMORE DRIVE
PORT ST. LUCIE, FL. 34984
PHONE: (800) 749-9056 , FAX: (772) 871-0990

REV. No	DESCRIPTION	DATE	REV. No	DESCRIPTION	DATE
1	OLD 17-244	06/8/2020	4		
2			5		

DRAWN BY: M.P.

06/8/2020
DATE

20-064
DRAWING No

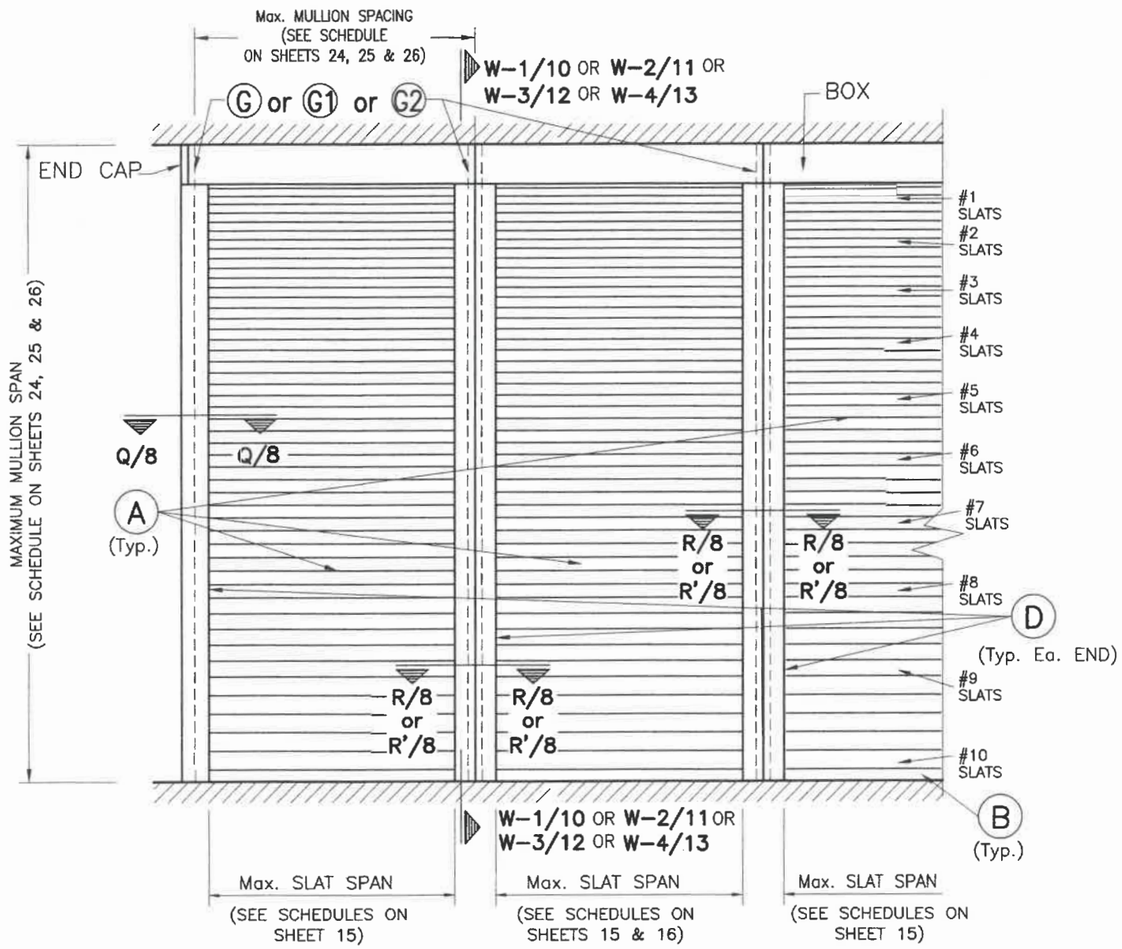

TYPICAL CONSECUTIVE SINGLE UNIT ELEVATION *, **
W/ MULLION & W/O STORM BARS

NOTE: SEE SHEETS 2 & 3 FOR COMPONENTS NOMENCLATURE.

N.T.S.

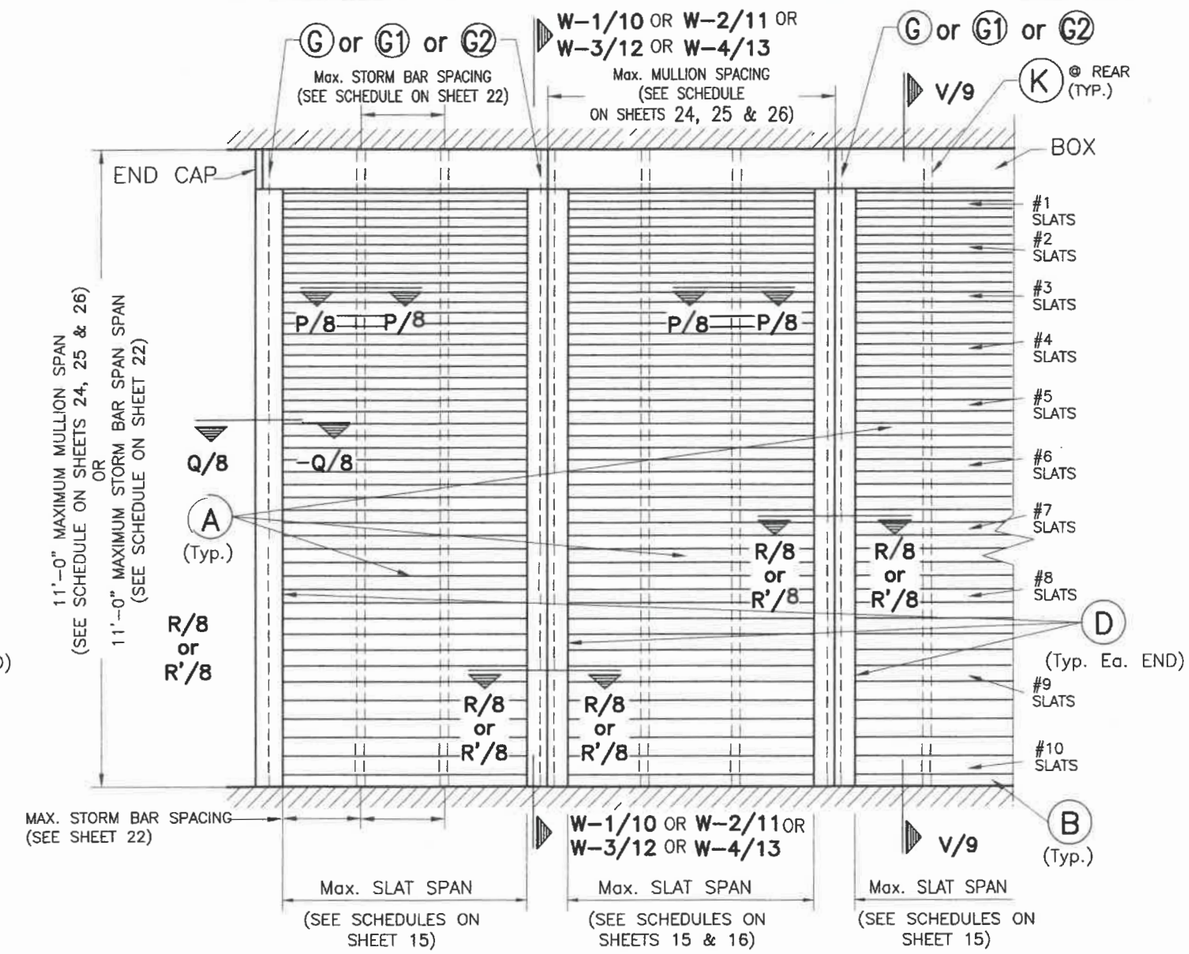

TYPICAL CONSECUTIVE SINGLE UNIT ELEVATION *
W/ MULLION & W/ STORM BARS

NOTE: SEE SHEETS 2 & 3 FOR COMPONENTS NOMENCLATURE.

N.T.S.

PROCEDURE FOR SLAT INSTALLATION GIVEN A SHUTTER HEIGHT:

* CASE 1: SHUTTER HEIGHT EQUAL OR LESS THAN 11'-0". APPLICABLE TO INSTALLATIONS W/O STORM BARS, W/ STORM BARS OR W/ STORM BARS & MULLIONS W/ HEIGHTS UP TO 11'-0".

(a) CURTAIN SHALL START W/ #1 SLATS AT TOP, FOLLOWED BY #2, #3, ... THEREAFTER ALL THE WAY DOWN. EACH SLAT # SHALL CONSIST OF FIVE (5) SLATS OF THAT SLAT NUMBER. PROCEDURE FOR ADDING SLATS DOWNWARD BELOW #1 SLAT SHALL BE CONTINUE UNTIL TOTAL SHUTTER HEIGHT IS COMPLETED. QUANTITY OF FINAL SLAT NUMBER INSTALLED BEFORE BOTTOM SLAT (B) MAY VARY WITH SHUTTER'S HEIGHT.

(b) BOTTOM SLAT (B) MUST BE ALWAYS INSTALLED.

** CASE 2: SHUTTER HEIGHT LARGER THAN 11'-0" APPLICABLE TO INSTALLATION W/O STORM BAR AND W/ MULLIONS W/ HEIGHTS LARGER THAN 11'-0".

(a) CURTAIN SHALL START W/ #1 SLATS AT TOP, FOLLOWED BY #2, #3, ... THEREAFTER ALL THE WAY DOWN. EACH SLAT # SHALL CONSIST OF FIVE (5) SLATS OF THAT SLAT NUMBER. PROCEDURE FOR ADDING SLATS DOWNWARD BELOW #1 SLAT SHALL BE CONTINUE UNTIL #10 SLAT IS INSTALLED. AFTER #10 SLAT IS INSTALLED, ADDITIONAL #10 SLATS MUST BE USED TO COMPLETE THE TOTAL SHUTTER HEIGHT.

(b) BOTTOM SLAT (B) MUST BE ALWAYS INSTALLED.

WALTER A. TILLIT JR. LICENSE No. 44167 STATE OF FLORIDA PROFESSIONAL ENGINEER

6/11/2020

P.E. SEAL/SIGNATURE/DATE

© 2020 TILTECO INC.

TILTECO INC.
TILLIT TESTING & ENGINEERING COMPANY
6355 N.W. 36th. St., Ste. 305, VIRGINIA GARDENS, Fl. 33166
Phone : (305)871-1530 . Fax : (305)871-1531
e-mail: tilteco@aol.com
CA-0006719
WALTER A. TILLIT Jr. P.E.
FLORIDA Lic. # 44167

FLORIDA BUILDING CODE (Non High Velocity Hurricane Zone)

Nautilus
Rolling Shutter System

EXPERT SHUTTER SERVICES INC.
668 S.W. WHITMORE DRIVE
PORT ST. LUCIE, FL. 34984
PHONE: (800) 749-9056 , FAX: (772) 871-0990

REV. No	DESCRIPTION	DATE	REV. No	DESCRIPTION	DATE
1	OLD 17-244	06/8/2020	4		
2			5		

DRAWN BY: M.P.

06/8/2020
DATE

20-064
DRAWING No

SHEET 5 OF 26

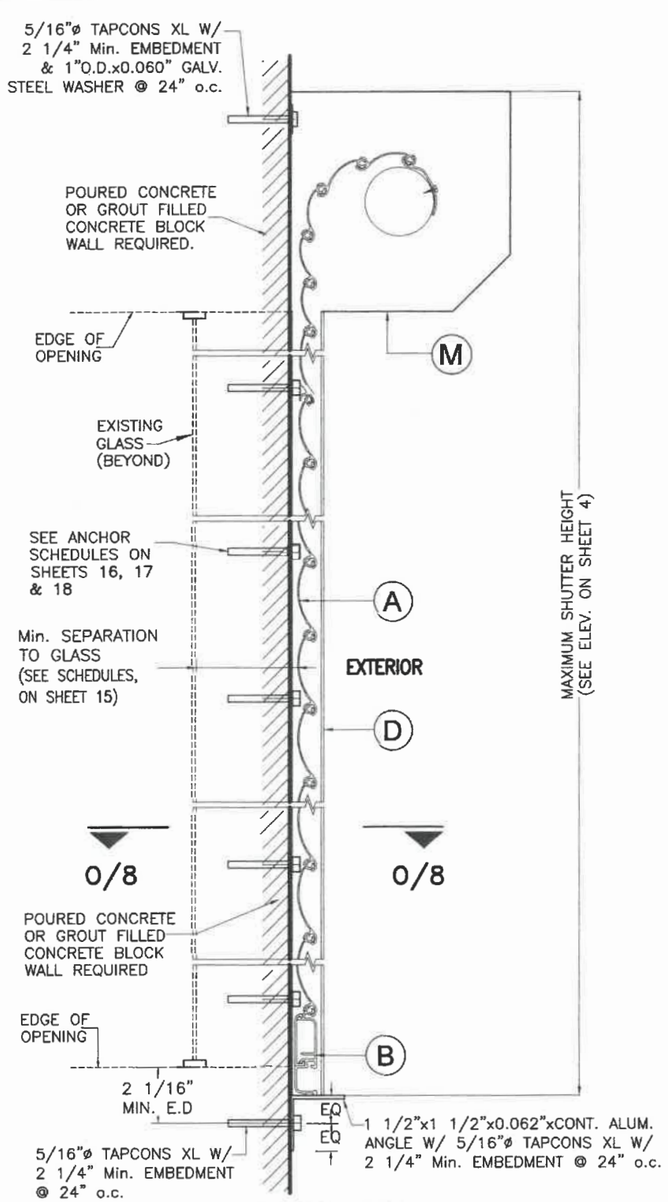

WALL MOUNTING

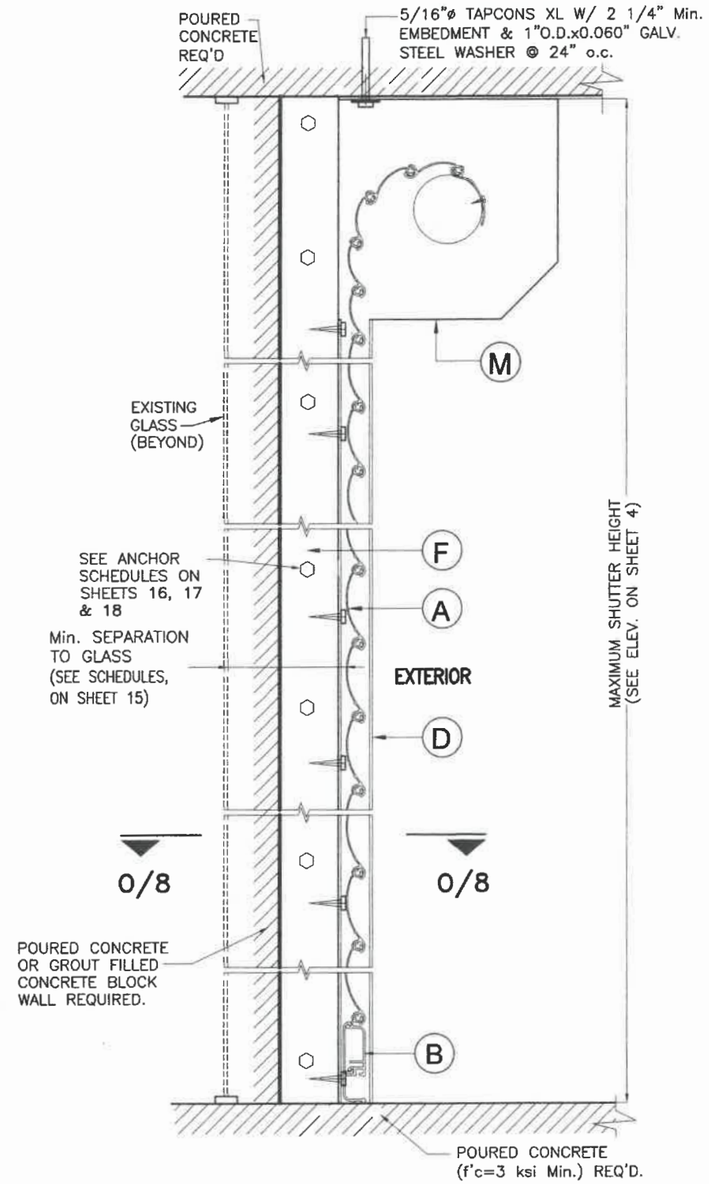

FLOOR/CEILING / TRAPPED MOUNTING

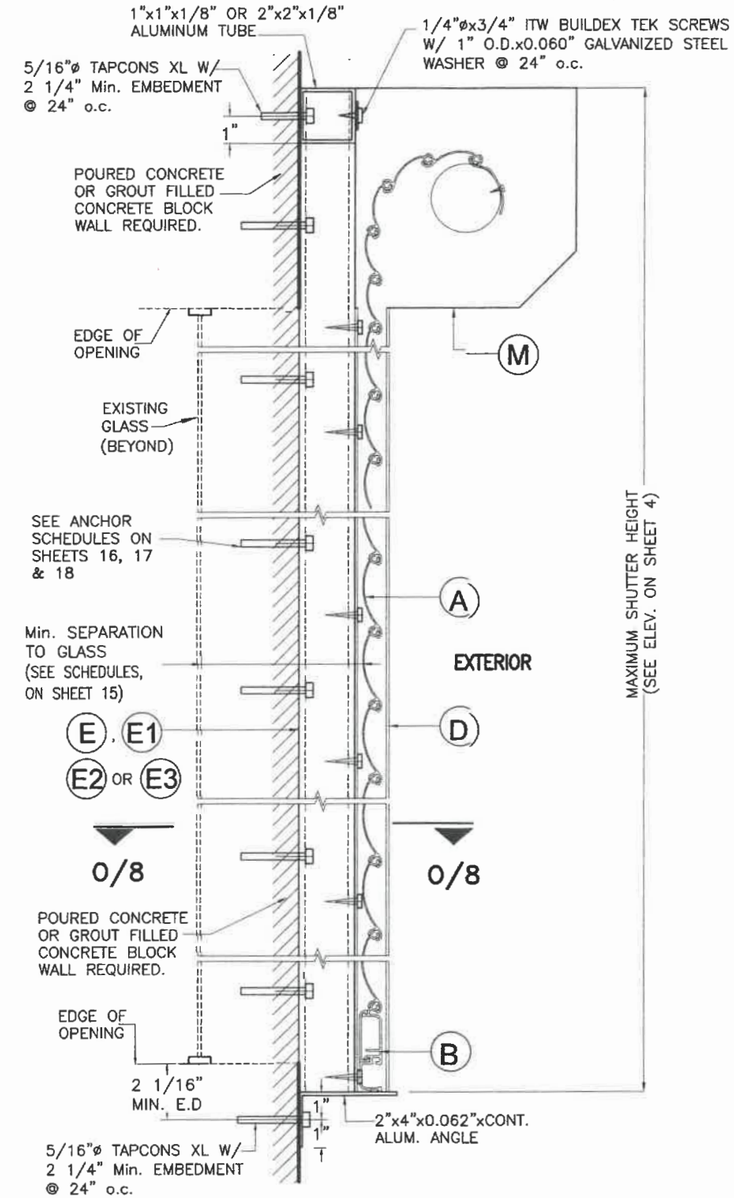

BUILD-OUT MOUNTING

SECTIONS Y–Y

FLORIDA BUILDING CODE (Non High Velocity Hurricane Zone)

INSTALLATION DETAILS ON EXISTING POURED CONCRETE OR GROUT FILLED CELL CONCRETE BLOCK BUILDINGS

SCALE: 3/16" = 1"

WALTER A. TILLIT JR. LICENSE No. 44167 STATE OF FLORIDA PROFESSIONAL ENGINEER

6/11/2020

P.E. SEAL/SIGNATURE/DATE

© 2020 TILTECO INC.

TILTECO INC.
TILLIT TESTING & ENGINEERING COMPANY
6355 N.W. 36th. St., Ste. 305, VIRGINIA GARDENS, Fl. 33166
Phone : (305)871-1530 . Fax : (305)871-1531
e-mail: tilteco@aol.com
CA-0006719
WALTER A. TILLIT Jr. P.E.
FLORIDA Lic. # 44167

Nautilus
Rolling Shutter System

EXPERT SHUTTER SERVICES INC.
668 S.W. WHITMORE DRIVE
PORT ST. LUCIE, FL. 34984
PHONE: (800) 749-9056 , FAX: (772) 871-0990

REV. No	DESCRIPTION	DATE	REV. No	DESCRIPTION	DATE
1	OLD 17-244	06/8/2020	4		
2			5		

DRAWN BY: M.P.

06/8/2020 DATE

20-064 DRAWING No

SHEET 6 OF 26

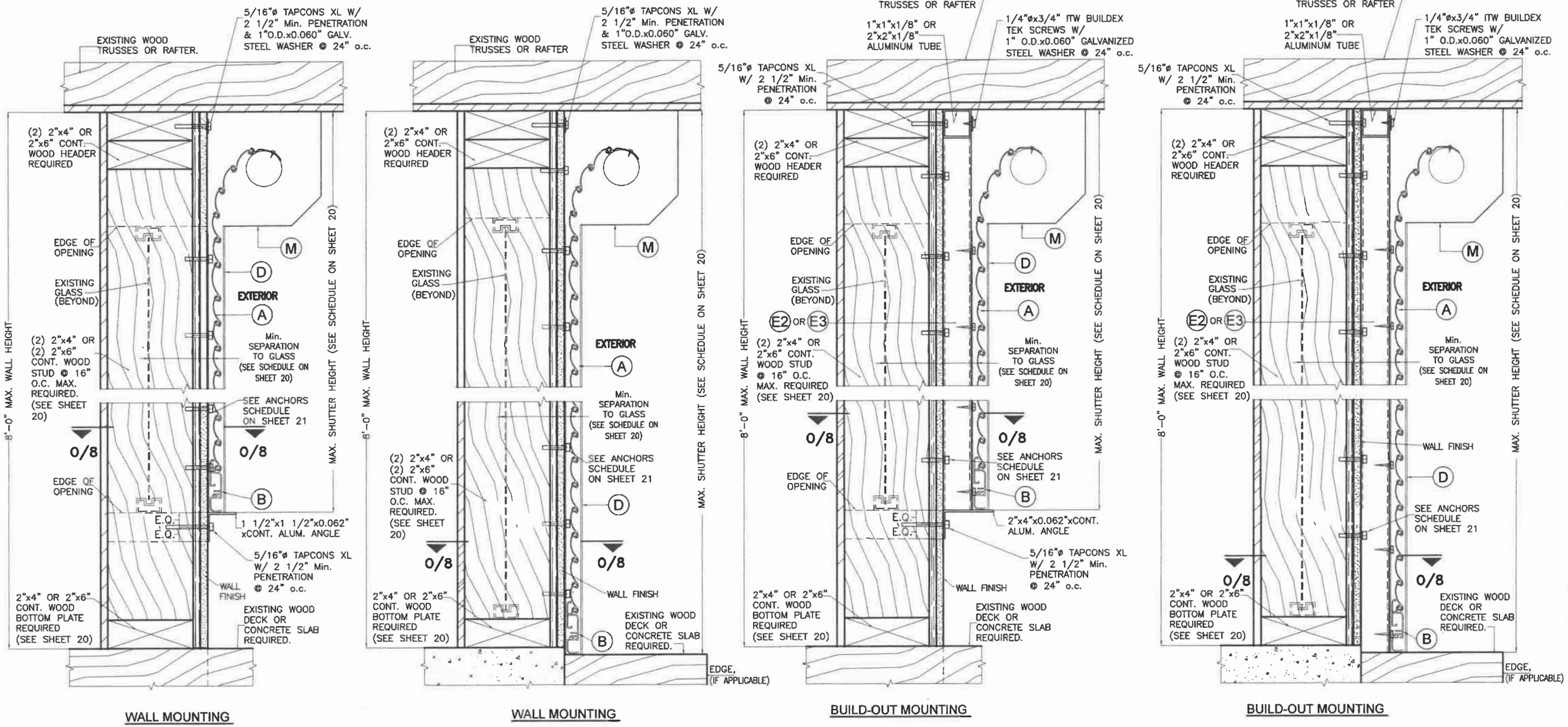

SECTIONS Y–Y

INSTALLATION DETAILS ON EXISTING WOOD BUILDINGS

N.T.S.

FLORIDA BUILDING CODE (Non High Velocity Hurricane Zone)

WALTER A. TILLIT JR. LICENSE No. 44167 STATE OF FLORIDA PROFESSIONAL ENGINEER

6/11/2020

SEAL/SIGNATURE/DATE

© 2020 TILTECO INC.

TILTECO INC.
TILLIT TESTING & ENGINEERING COMPANY
6355 N.W. 36th. St., Ste. 305, VIRGINIA GARDENS, Fl. 33166
Phone : (305)871-1530 . Fax : (305)871-1531
e-mail: tilteco@aol.com
CA-0006719
WALTER A. TILLIT Jr. P.E.
FLORIDA Lic. # 44167

Nautilus
Rolling Shutter System

EXPERT SHUTTER SERVICES INC.
668 S.W. WHITMORE DRIVE
PORT ST. LUCIE, FL. 34984
PHONE: (800) 749-9056 , FAX: (772) 871-0990

REV. No	DESCRIPTION	DATE	REV. No	DESCRIPTION	DATE
1	OLD 17-244	06/8/2020	4		
2			5		

DRAWN BY: M.P.

06/8/2020 DATE

20-064 DRAWING No

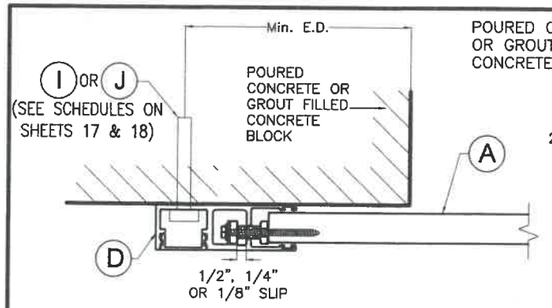

FLUSH MOUNT (WALL)

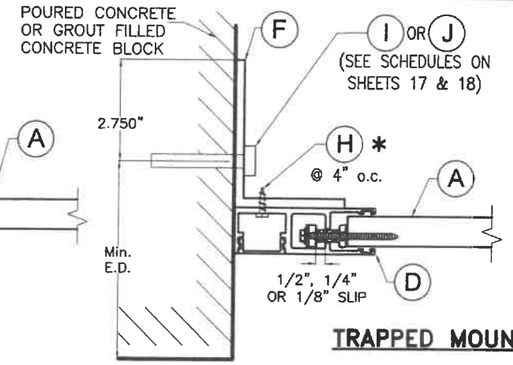

TRAPPED MOUNT

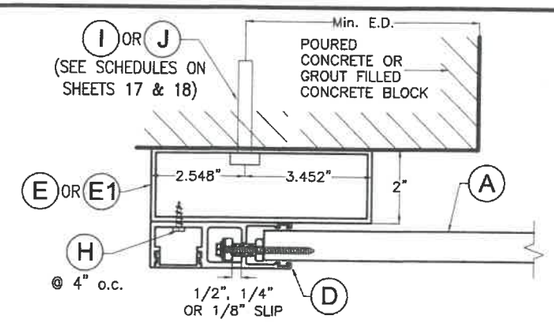

BUILD-OUT MOUNT

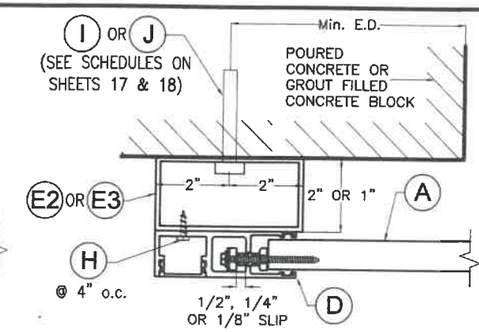

BUILD-OUT MOUNT

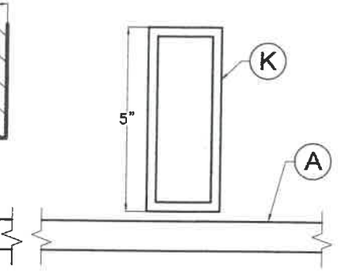

SECTION W/ STORM BARS

SECTION P-P (PLAN)

SCALE: 3/16" = 1"

SECTIONS O-O (PLAN)

INSTALLATION DETAILS INTO EXISTING POURED CONCRETE OR GROUT FILLED CONCRETE BLOCK BUILDINGS

SCALE: 1/4" = 1"

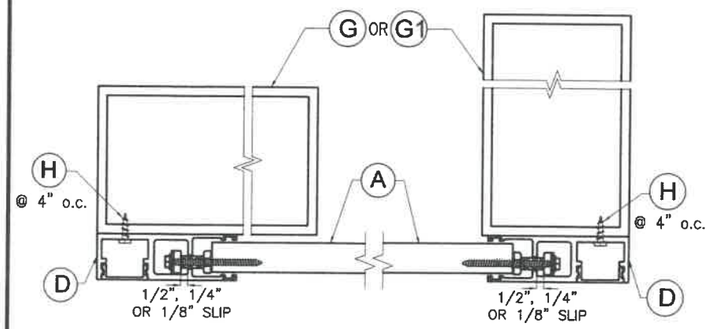

SECTION Q-Q (PLAN)
ORIENTATION #1
WALL MOUNT END MULLION

SECTION Q-Q (PLAN)
ORIENTATION #2
WALL MOUNT END MULLION

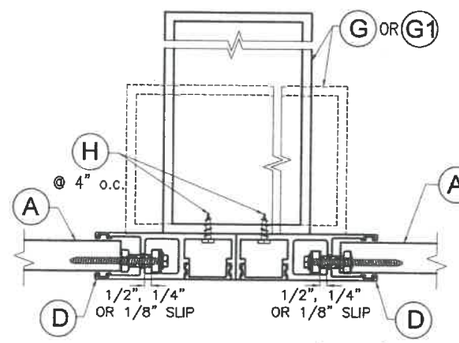

SECTION R-R (PLAN)
ORIENTATIONS #1 & #2
WALL MOUNT INTERIOR MULLION

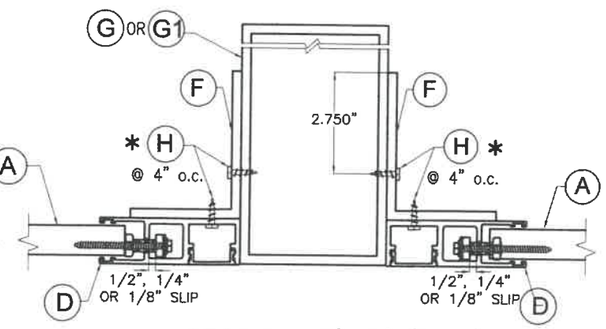

SECTION R'-R' (PLAN)
ORIENTATION #2
TRAPPED MOUNT INTERIOR MULLION

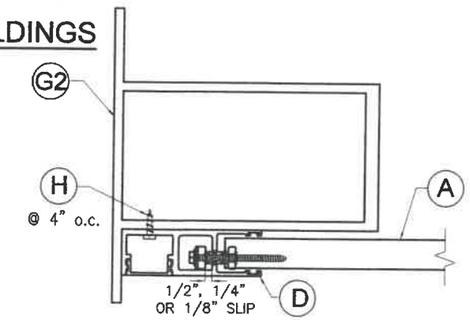

SECTION Q'-Q' (PLAN)
ORIENTATION #1
WALL MOUNT END MULLION

INSTALLATION DETAILS INTO MULLIONS G, G1, G2

SCALE: 1/4" = 1"

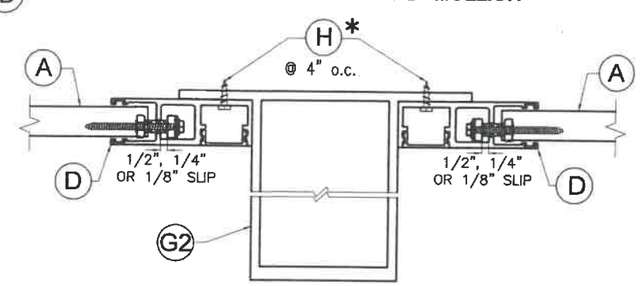

SECTION Q'-Q' (PLAN)
ORIENTATION #2
WALL MOUNT END & INTERIOR MULLION

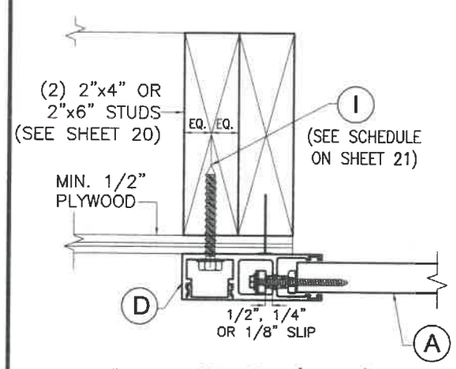

FLUSH MOUNT (WALL)

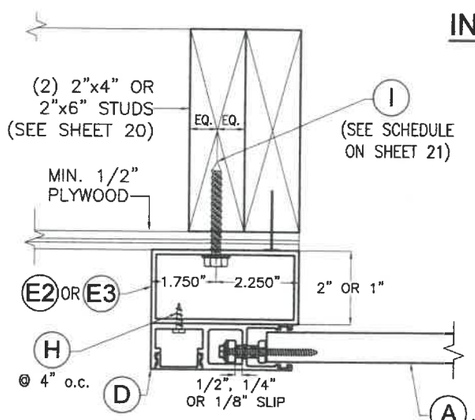

BUILD-OUT MOUNT

SECTIONS O'-O' (PLAN)

INSTALLATION DETAILS INTO EXISTING WOOD BUILDINGS

SCALE: 1/4" = 1"

* ALTERNATIVELY TO (H), A 1/4"ø-20x3/4" S.S. M.S. W/ NUT MAY BE USED FOR THIS CONNECTION

FLORIDA BUILDING CODE (Non High Velocity Hurricane Zone)

WALTER A. TILLIT JR. LICENSE No. 44167 STATE OF FLORIDA PROFESSIONAL ENGINEER

SEAL/SIGNATURE/DATE

© 2020 TILTECO INC.

TILTECO INC.
TILLIT TESTING & ENGINEERING COMPANY
6355 N.W. 36th. St., Ste. 305, VIRGINIA GARDENS, Fl. 33166
Phone : (305)871-1530 . Fax : (305)871-1531
e-mail: tilteco@aol.com
CA-0006719
WALTER A. TILLIT Jr. P.E.
FLORIDA Lic. # 44167

Nautilus
Rolling Shutter System

EXPERT SHUTTER SERVICES INC.
668 S.W. WHITMORE DRIVE
PORT ST. LUCIE, FL. 34984
PHONE: (800) 749-9056 , FAX: (772) 871-0990

REV. No	DESCRIPTION	DATE	REV. No	DESCRIPTION	DATE
1	OLD 17-244	06/8/2020	4		
2			5		

DRAWN BY: M.P.

06/8/2020
DATE

20-064
DRAWING No

SHEET 8 OF 26

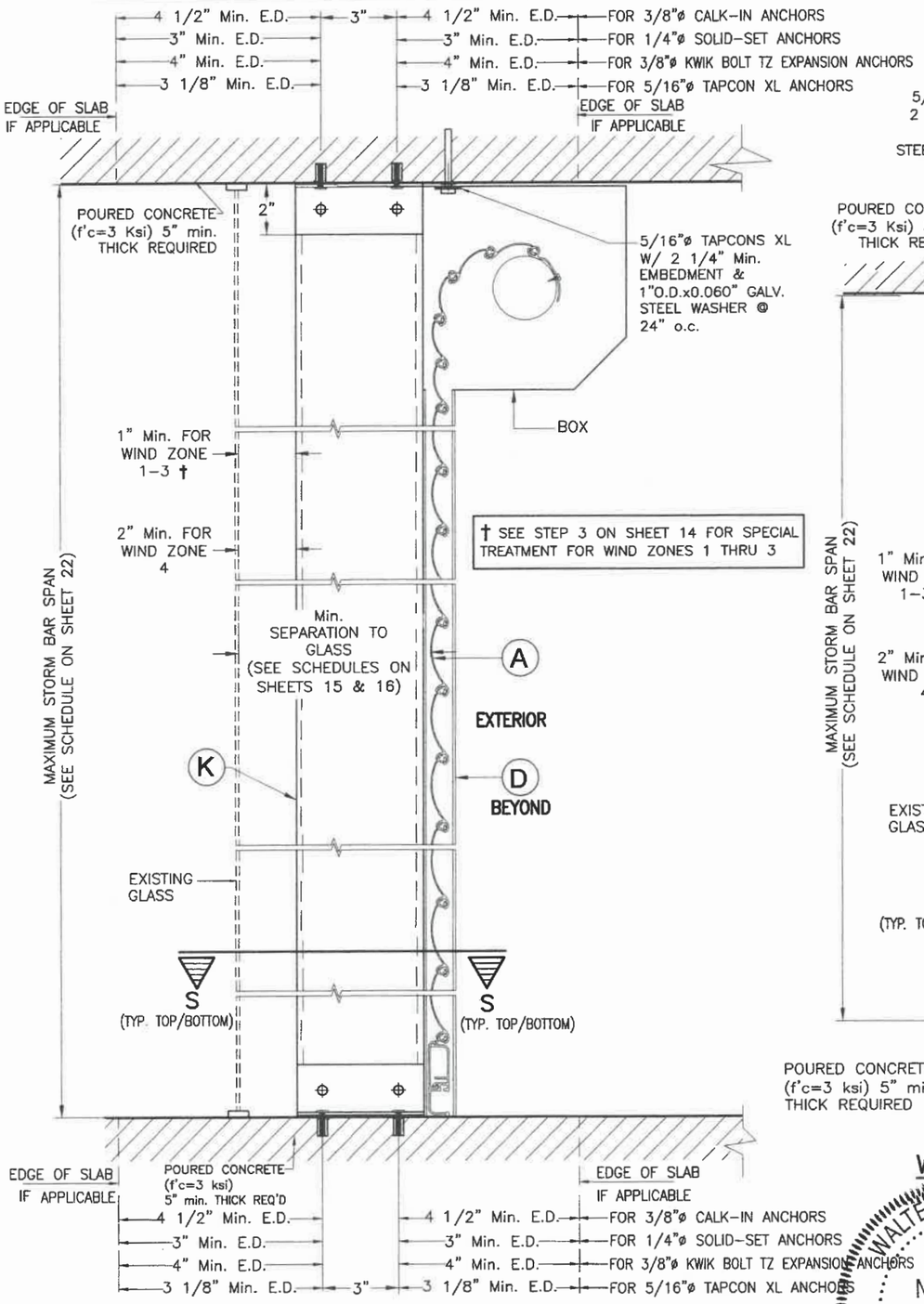

FLOOR TO CEILING / TRAPPED AND WALL MOUNTING : STORM BAR (K)

SECTIONS V

SCALE: 3/16" = 1"

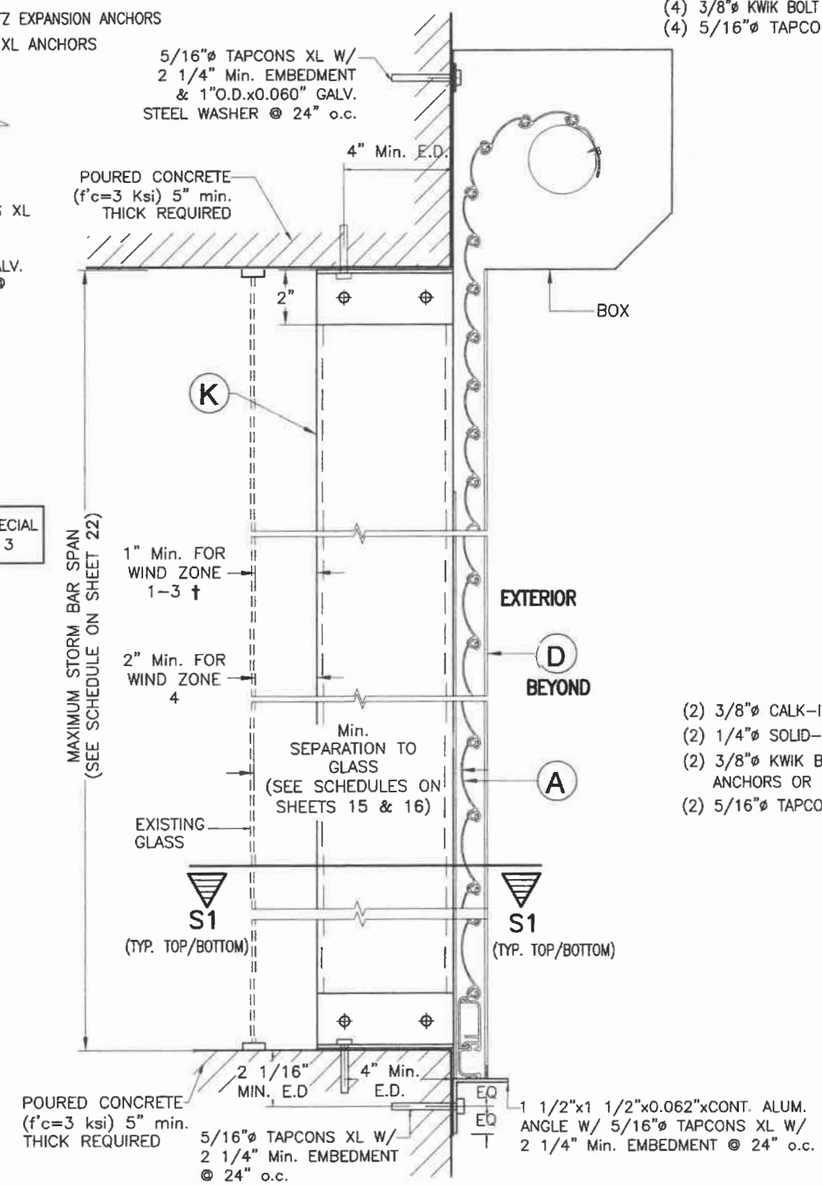

WALL MOUNTING

(4) 3/8"ø CALK-IN ANCHORS OR
(4) 1/4"ø SOLID-SET ANCHORS OR
(4) 3/8"ø KWIK BOLT TZ EXPANSION ANCHORS OR
(4) 5/16"ø TAPCON XL ANCHORS

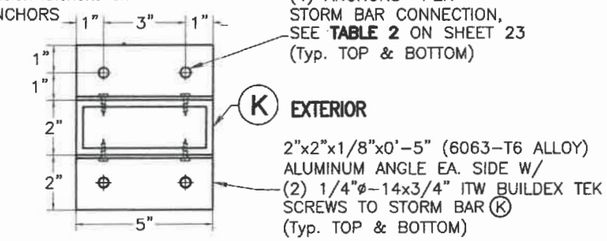

SECTION S - S

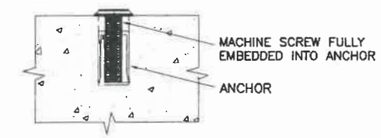

DETAIL A

* 1/4" ø-20 OR 3/8" ø-16 MACHINE SCREWS USED JOINTLY W/ 1/4"ø x 3/4" SOLID-SET OR 3/8"ø x 1 1/4" CALK-IN ANCHORS RESPECTIVELY SHALL BE LEFT TOGETHER W/ ANCHORS AT THE TIME STORM BARS ARE REMOVED. (SEE DET. A).

(2) ANCHORS* PER STORM BAR CONNECTION, SEE TABLE 3 ON SHEET 23 (Typ. TOP & BOTTOM)

(2) 3/8"ø CALK-IN ANCHORS OR
(2) 1/4"ø SOLID-SET ANCHORS OR
(2) 3/8"ø KWIK BOLT TZ EXPANSION ANCHORS OR
(2) 5/16"ø TAPCON XL ANCHORS

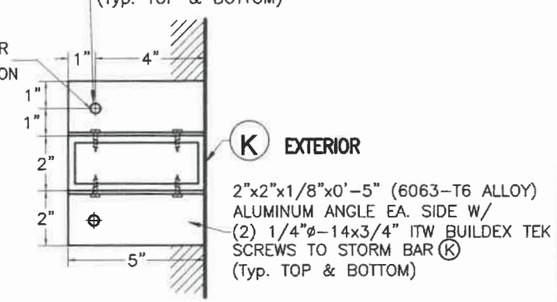

SECTION S1 - S1

FLORIDA BUILDING CODE (Non High Velocity Hurricane Zone)

WALTER A. TILLIT JR. LICENSE No. 44167 STATE OF FLORIDA PROFESSIONAL ENGINEER

6/11/2020

P.E. SEAL/SIGNATURE/DATE

© 2020 TILTECO INC.

TILTECO INC.
TILLIT TESTING & ENGINEERING COMPANY
6355 N.W. 36th. St., Ste. 305, VIRGINIA GARDENS, Fl. 33166
Phone : (305)871-1530 . Fax : (305)871-1531
e-mail: tilteco@aol.com
CA-0006719
WALTER A. TILLIT Jr. P.E.
FLORIDA Lic. # 44167

Nautilus
Rolling Shutter System

EXPERT SHUTTER SERVICES INC.
668 S.W. WHITMORE DRIVE
PORT ST. LUCIE, FL. 34984
PHONE: (800) 749-9056 , FAX: (772) 871-0990

REV. No	DESCRIPTION	DATE	REV. No	DESCRIPTION	DATE
1	OLD 17-244	06/8/2020	4		
2			5		

DRAWN BY: M.P.

06/8/2020 DATE

20-064 DRAWING No

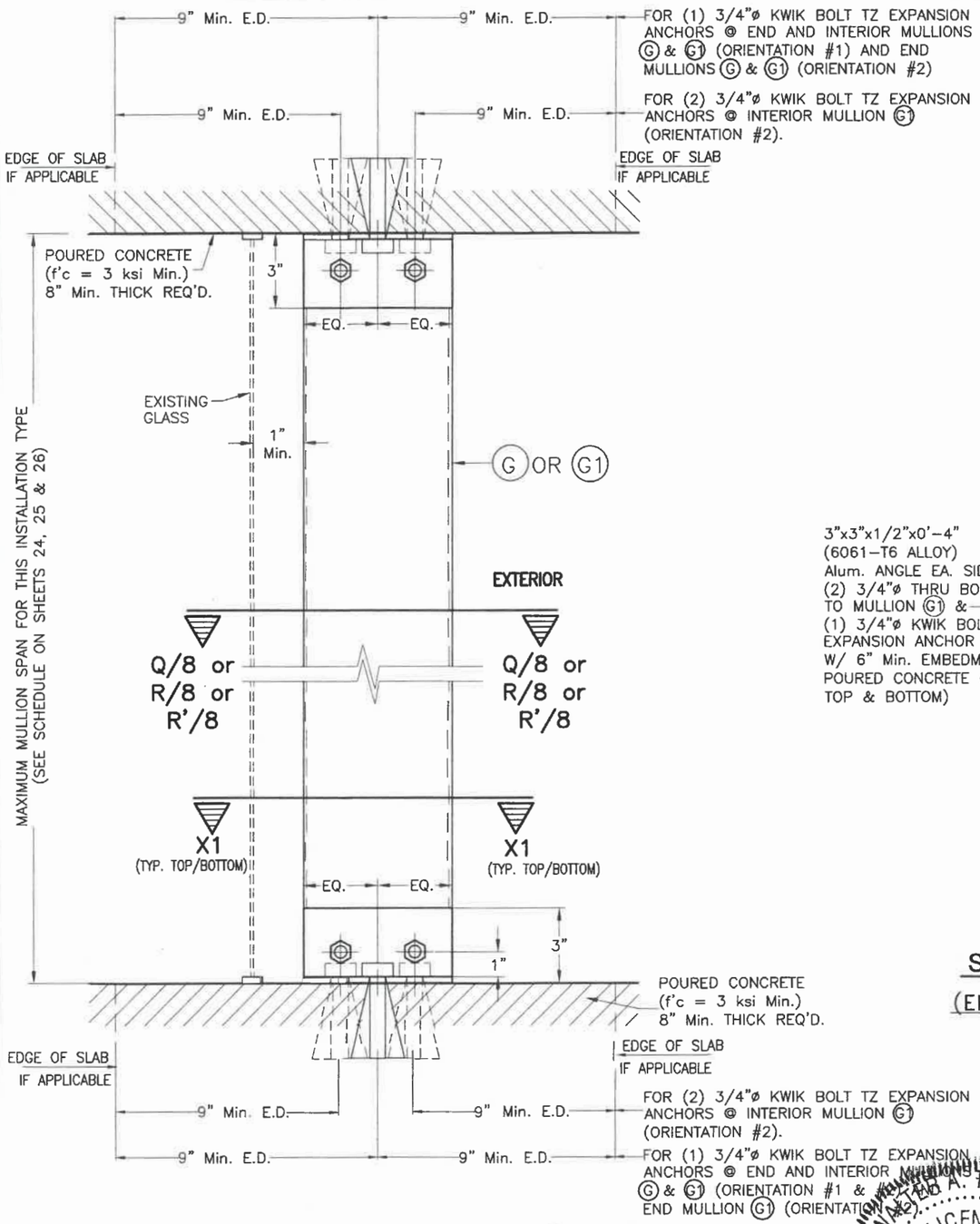

FLOOR TO CEILING / TRAPPED MOUNTING : MULLIONS (G) OR (G1)
SECTIONS W-1

END & INTERIOR TRAPPED MOUNTED MULLION INSTALLATION *

SCALE: 1/8" = 1"

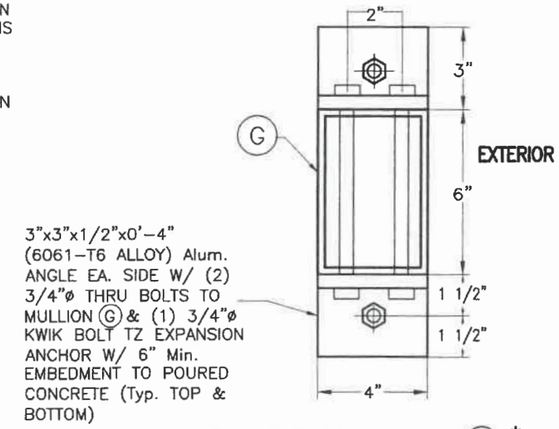

SECTION X1-X1 W/ (G) *

(END & INTERIOR MULLION)
(W/ ORIENTATION # 1)
(6"x4")

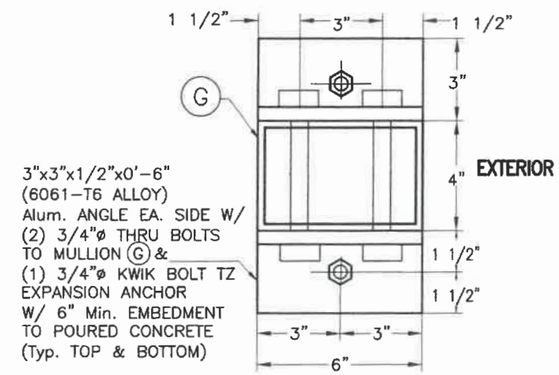

ALTERNATIVE SECTION X1-X1 W/ (G) *

(END & INTERIOR MULLION)
(W/ ORIENTATION # 2)
(4"x6")

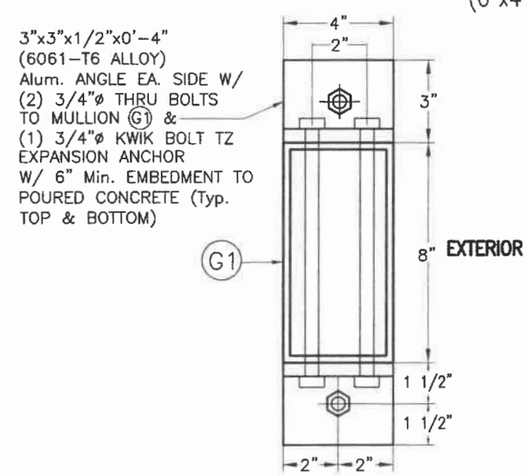

SECTION X1-X1 W/ (G1) *

(END & INTERIOR MULLION)
(W/ ORIENTATION # 1)
(8"x4")

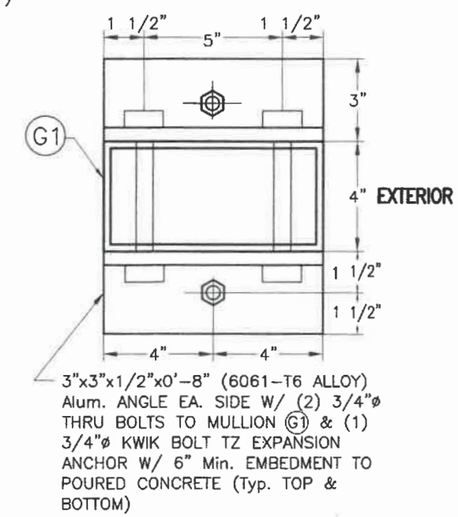

(END MULLION ONLY)

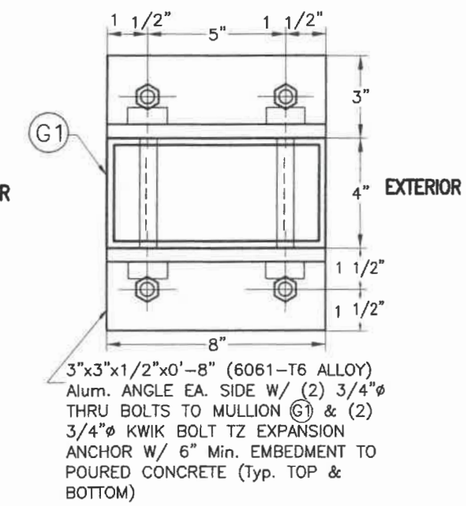

(INTERIOR MULLION ONLY)

ALTERNATIVES SECTION X1-X1 W/ (G1) *

(W/ ORIENTATION # 2)
(4"x8")

* SIDE RAIL (D) AND BOX NOT SHOWN FOR CLARITY

FLORIDA BUILDING CODE (Non High Velocity Hurricane Zone)

WALTER A. TILLIT JR. LICENSE No. 44167 STATE OF FLORIDA PROFESSIONAL ENGINEER

6/11/2020
SEAL/SIGNATURE/DATE

© 2020 TILTECO INC.

TILTECO INC.
TILLIT TESTING & ENGINEERING COMPANY
6355 N.W. 36th. St., Ste. 305, VIRGINIA GARDENS, Fl. 33166
Phone : (305)871-1530 . Fax : (305)871-1531
e-mail: tilteco@aol.com
CA-0006719
WALTER A. TILLIT Jr. P.E.
FLORIDA Lic. # 44167

Nautilus
Rolling Shutter System

EXPERT SHUTTER SERVICES INC.
668 S.W. WHITMORE DRIVE
PORT ST. LUCIE, FL. 34984
PHONE: (800) 749-9056 , FAX: (772) 871-0990

REV. No	DESCRIPTION	DATE	REV. No	DESCRIPTION	DATE
1	OLD 17-244	06/8/2020	4		
2			5		

DRAWN BY: M.P.
06/8/2020 DATE
20-064 DRAWING No
SHEET 10 OF 26

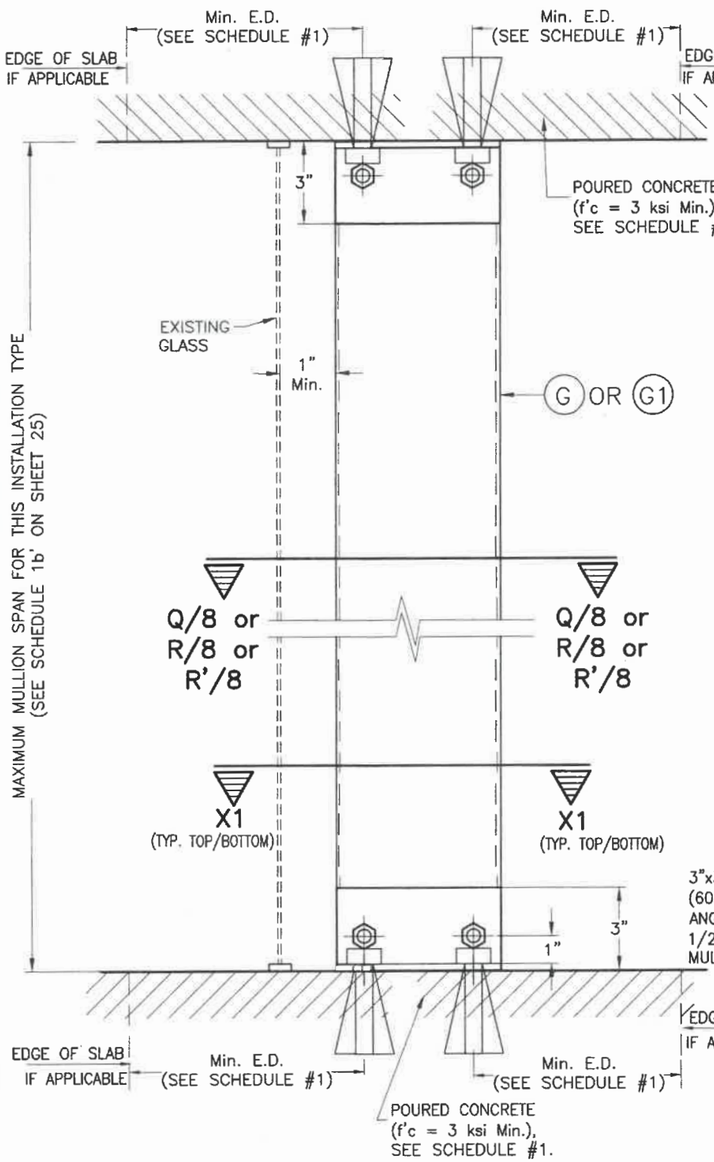

FLOOR TO CEILING / TRAPPED MOUNTING : MULLIONS Ⓖ OR Ⓖ1
SECTIONS W-1

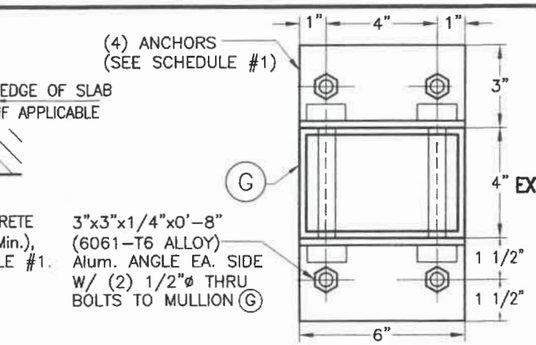

ALTERNATIVE SECTION X1-X1 W/ Ⓖ*

(4"x6" INTERIOR MULLION ONLY W/ ORIENTATION # 2)

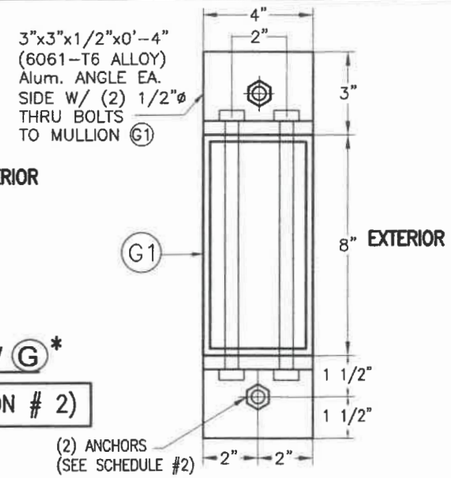

ALTERNATIVE SECTION X1-X1 W/ Ⓖ1*

(4"x8" INTERIOR AND END MULLION W/ ORIENTATION # 1)

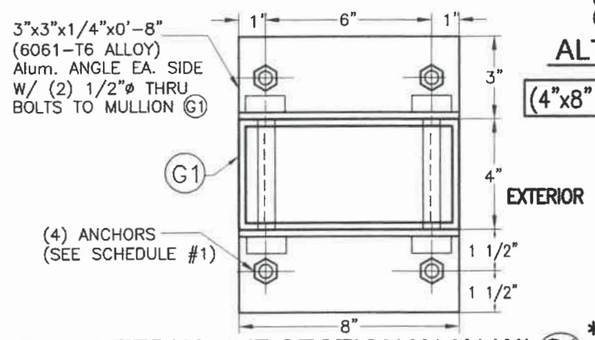

ALTERNATIVE SECTION X1-X1 W/ Ⓖ1*

(4"x8" INTERIOR MULLION ONLY W/ ORIENTATION # 2)

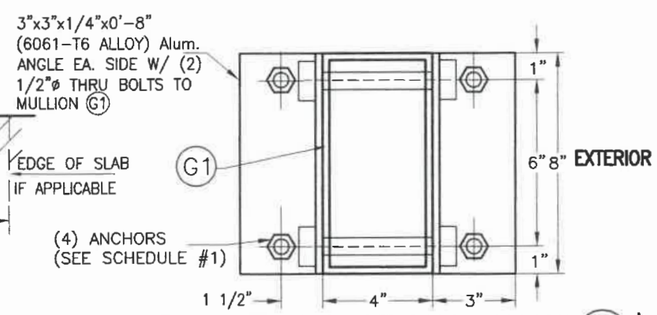

ALTERNATIVE SECTION X1-X1 W/ Ⓖ1*

(4"x8" INTERIOR AND END MULLION ONLY W/ ORIENTATION # 1)

◊ SEE MAXIMUM Ⓖ (INTERIOR) & Ⓖ1 (END & INTERIOR) TRAPPED MOUNTED MULLIONS SPAN COVERED BY SCHEDULE 1b' FOR INSTALLATION CASES I, Ia & II ON SHEET 25.
(LIMITED LOAD, MULLION SPACING AND SPAN INSTALLATION):

INSTALLATION CASE I – RESIDENTIAL AND COMMERCIAL APPLICATIONS WITH ±60.8 p.s.f. MAXIMUM A.S.D. DESIGN PRESSURE RATING, 12'-0" MAXIMUM MULLION SPACING. SEE SCHEDULES #1 & #2 FOR ADDITIONAL SPECS.

INSTALLATION CASE Ia – RESIDENTIAL AND COMMERCIAL APPLICATION W/ ±60.8 p.s.f. MAXIMUM A.S.D. DESIGN PRESSURE RATING, 8'-0" MAXIMUM MULLION SPACING. SEE SCHEDULES #1 & #2 FOR ADDITIONAL SPECS.

INSTALLATION CASE II – COMMERCIAL APPLICATION FOR ±100.0 p.s.f. MAXIMUM A.S.D. DESIGN PRESSURE RATING, 8'-0" MAXIMUM MULLION SPACING. SEE SCHEDULES #1 & #2 FOR ADDITIONAL SPECS.

SCHEDULE #1

INSTALLATION CASES	MIN. SLAB THICKNESS REQ'D.	ANCHOR TYPE & SIZE (TYP. TOP & BOTTOM)	MIN. ANCHOR EMBEDMENT	MIN. EDGE DISTANCE FOR ANCHOR
I	4"	3/8"ø HILTI INC HUS-H SCREW & 3/8"ø POWER FASTENER WEDGE-BOLT ANCHOR FOR Ⓖ & Ⓖ1 (INTERIOR) MULLIONS W/ ORIENTATION #2.	2 1/2"	5 1/2"
		1/2"ø HILTI INC HUS-H SCREW & 1/2"ø POWER FASTENER WEDGE- BOLT ANCHOR FOR Ⓖ1 (END & INTERIOR) MULLION W/ ORIENTATION #1.	3"	6"
Ia	4"	1/2"ø HILTI INC KWIK BOLT TZ ONLY FOR Ⓖ & Ⓖ1 INTERIOR MULLIONS W/ ORIENTATION #2) & Ⓖ1 (END MULLION W/ ORIENTATION #1).	2 1/2"	5 1/2"
		1/2"ø HILTI INC HUS-H SCREW & 1/2"ø POWER FASTENER WEDGE- BOLT ANCHOR FOR Ⓖ & Ⓖ1 (END OR INTERIOR MULLION) W/ ORIENTATIONS #1 OR #2.	3"	6"
II	6"	1/2"ø HILTI INC KWIK BOLT TZ ONLY FOR Ⓖ & Ⓖ1 INTERIOR MULLIONS W/ ORIENTATION #2) & Ⓖ1 (END MULLION W/ ORIENTATION #1).	3 1/4"	7 1/2"
		1/2"ø HILTI INC HUS-H SCREW OR 1/2"ø POWER FASTENER WEDGE- BOLT ANCHOR SEE * NOTE ON SCHEDULE 1b' ON SHEET 25. VALID FOR END & INTERIOR MULLIONS Ⓖ & Ⓖ1 W/ ORIENTATIONS #1 OR #2.	3"	6"

SCHEDULE #2

INSTALLATION CASES	MIN. SLAB THICKNESS REQ'D.	ANCHOR TYPE & SIZE (TYP. TOP & BOTTOM)	MIN. ANCHOR EMBEDMENT	MIN. EDGE DISTANCE FOR ANCHOR
I, Ia & II	4"	5/8"ø HILTI INC HUS-H SCREW & 5/8"ø POWER FASTENER WEDGE-BOLT ANCHOR.	2 1/2"	7 1/2"

FLORIDA BUILDING CODE (Non High Velocity Hurricane Zone)

◊ END & INTERIOR TRAPPED MOUNTED MULLION INSTALLATION *
APPLICABLE TO A LIMITED LOAD, MULLION SPAN AND MULLION SPACING INSTALLATIONS

SCALE: 1/8" = 1"

* SIDE RAIL Ⓓ AND BOX NOT SHOWN FOR CLARITY

WALTER A. TILLIT JR. P.E. No. 44167 STATE OF FLORIDA PROFESSIONAL ENGINEER

6/11/2020

P.E. SEAL/SIGNATURE/DATE

© 2020 TILTECO INC.

TILTECO INC.
TILLIT TESTING & ENGINEERING COMPANY
6355 N.W. 36th. St., Ste. 305, VIRGINIA GARDENS, Fl. 33166
Phone : (305)871-1530 . Fax : (305)871-1531
e-mail: tilteco@aol.com
CA-0006719
WALTER A. TILLIT Jr. P.E.
FLORIDA Lic. # 44167

Nautilus
Rolling Shutter System

EXPERT SHUTTER SERVICES INC.
668 S.W. WHITMORE DRIVE
PORT ST. LUCIE, FL. 34984
PHONE: (800) 749-9056 , FAX: (772) 871-0990

REV. No	DESCRIPTION	DATE	REV. No	DESCRIPTION	DATE
1	OLD 17-24	06/8/2020	4		
2			5		

DRAWN BY: M.P.
06/8/2020 DATE
20-064 DRAWING No
SHEET 10A OF 26

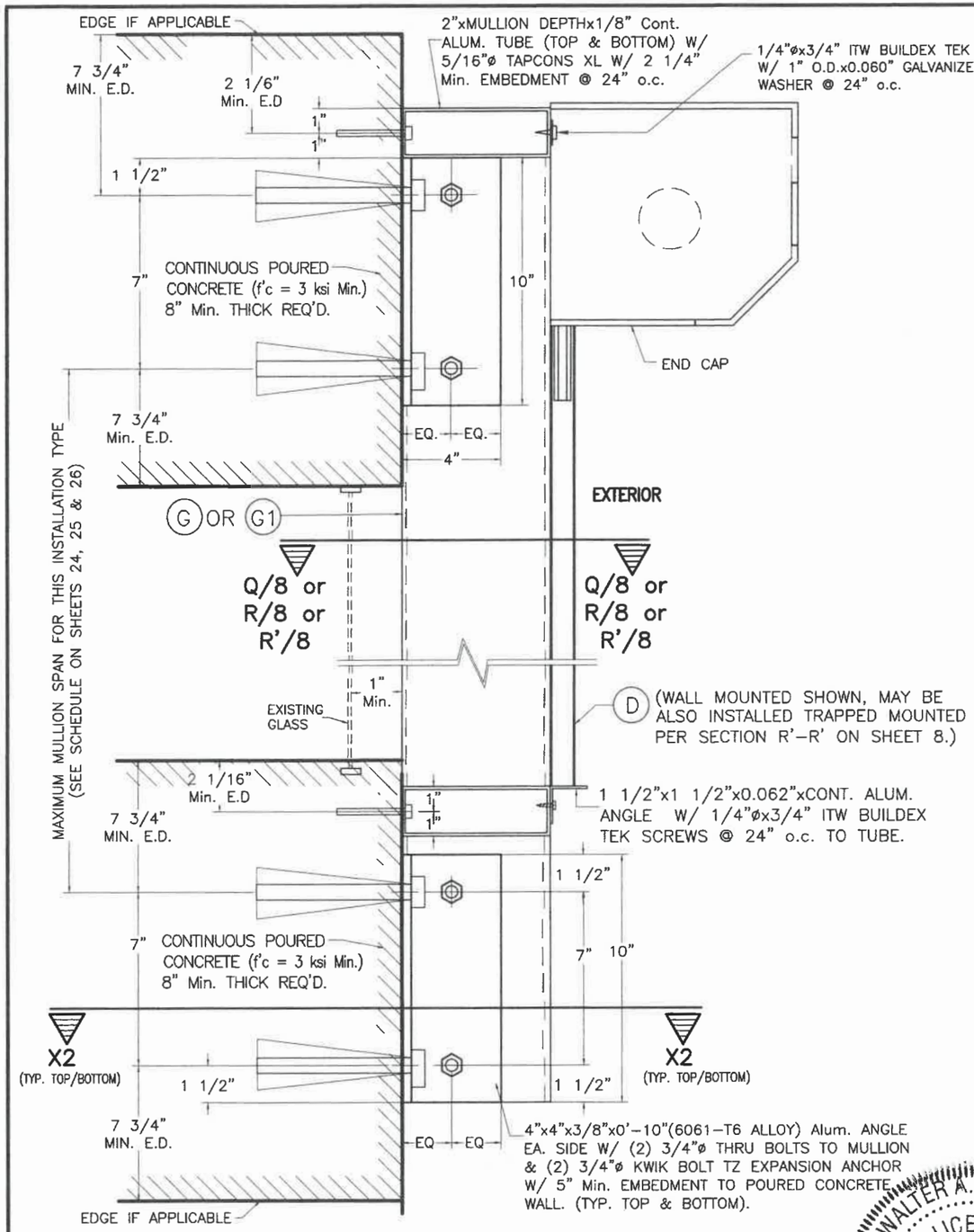

WALL MOUNTING : MULLIONS G OR G1
POURED CONCRETE WALL
SECTION W-2

END & INTERIOR WALL MOUNTED MULLION INSTALLATION

SCALE: 1/8" = 1"

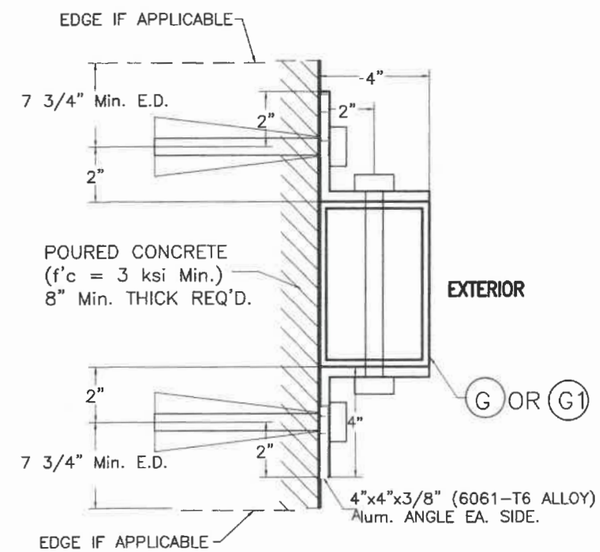

SECTION X2-X2 W/ G OR G1*
(END & INTERIOR MULLION)
(W/ ORIENTATION # 1)
(6"x4" or 8"x4")

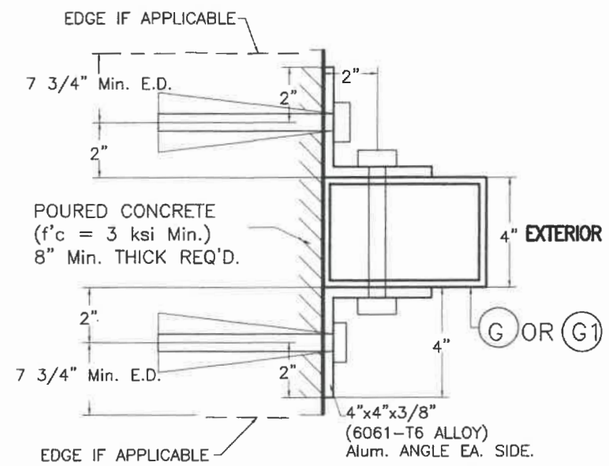

ALTERNATIVE SECTION X2-X2 W/ G OR G1*
(END & INTERIOR MULLION)
(W/ ORIENTATION # 2)
(4"x6" or 4"x8")

* SIDE RAIL D NOT SHOWN FOR CLARITY

FLORIDA BUILDING CODE (Non High Velocity Hurricane Zone)

WALTER A. TILLIT JR. LICENSE No. 44167 STATE OF FLORIDA PROFESSIONAL ENGINEER

6/11/2020

SEAL/SIGNATURE/DATE

© 2020 TILTECO INC.

TILTECO INC.
TILLIT TESTING & ENGINEERING COMPANY
6355 N.W. 36th. St., Ste. 305, VIRGINIA GARDENS, Fl. 33166
Phone : (305)871-1530 . Fax : (305)871-1531
e-mail: tilteco@aol.com
CA-0006719
WALTER A. TILLIT Jr. P.E.
FLORIDA Lic. # 44167

Nautilus Rolling Shutter System

EXPERT SHUTTER SERVICES INC.
668 S.W. WHITMORE DRIVE
PORT ST. LUCIE, FL. 34984
PHONE: (800) 749-9056 , FAX: (772) 871-0990

REV. No	DESCRIPTION	DATE	REV. No	DESCRIPTION	DATE
1	OLD 17-244	06/8/2020	4		
2			5		

DRAWN BY: M.P.
06/8/2020 DATE
20-064 DRAWING No
SHEET 11 OF 26

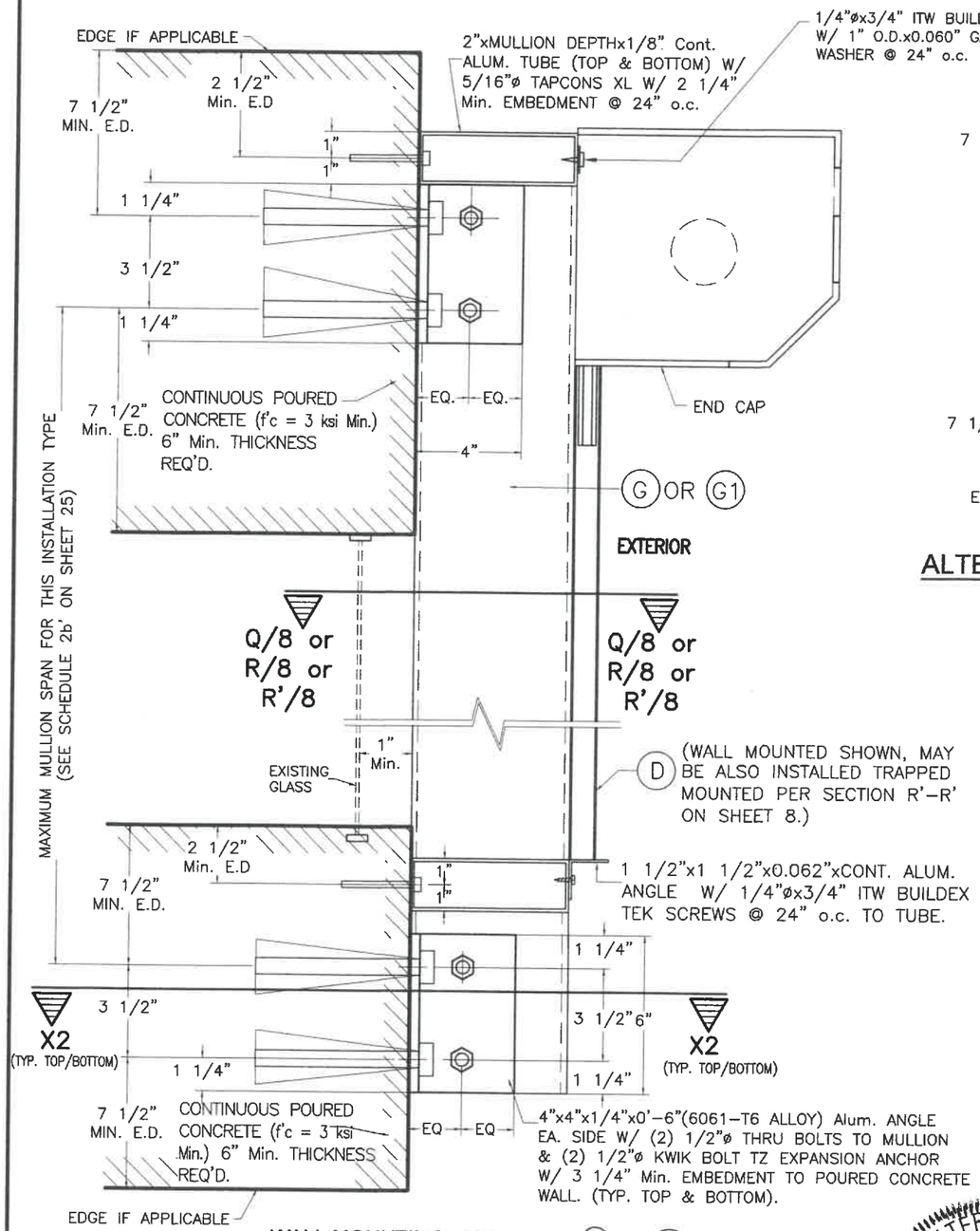

WALL MOUNTING : MULLIONS G OR G1
POURED CONCRETE WALL
SECTION W-2

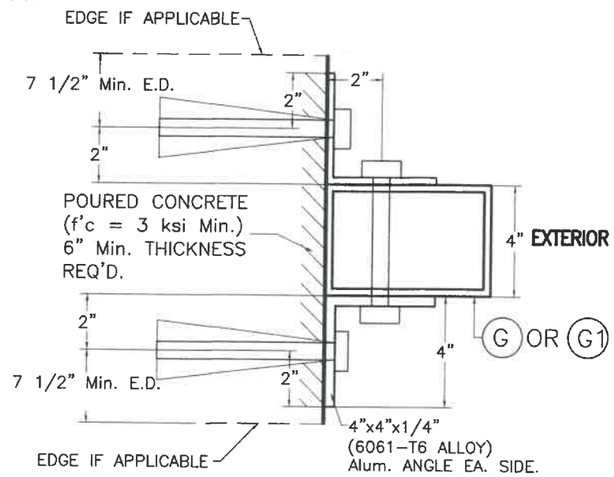

ALTERNATIVE SECTION X2-X2 W/ G OR G1 *

(INTERIOR MULLION)
(W/ ORIENTATION # 2)
(4"x6" or 4"x8")

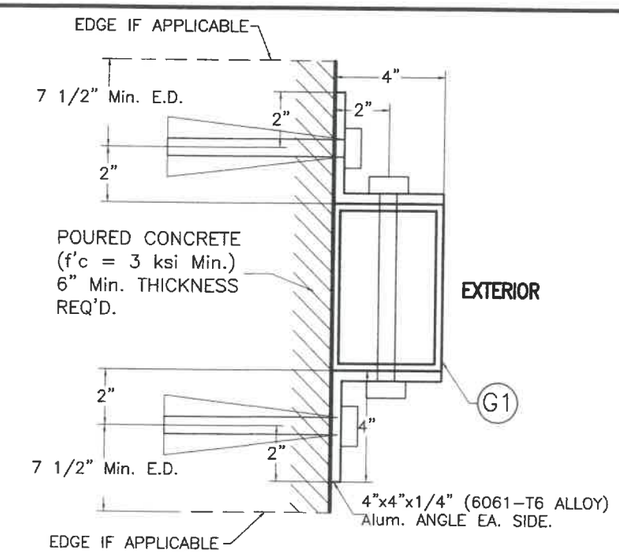

ALTERNATIVE SECTION X2-X2 W/ G1 *

(END & INTERIOR MULLIONS)
(W/ ORIENTATION # 1)
(8"x4")

◊ SEE MAXIMUM G (INTERIOR) & G1 (END & INTERIOR) WALL MOUNTED MULLIONS SPAN COVERED BY SCHEDULE 2b' FOR INSTALLATION CASES I' & II' ON SHEET 25 (LIMITED LOAD, MULLION SPACING AND SPAN INSTALLATION):

INSTALLATION CASE I' – RESIDENTIAL AND COMMERCIAL APPLICATIONS WITH ±60.8 p.s.f. MAXIMUM A.S.D. DESIGN PRESSURE RATING, 12'-0" MAXIMUM MULLION SPACING. VALID FOR CONNECTION TO CONCRETE W/ HILTI INC HUS-H OR POWER FASTENERS WEDGE-BOLT ANCHORS.

INSTALLATION CASE II' – COMMERCIAL APPLICATION FOR ±100.0 p.s.f. MAXIMUM A.S.D. DESIGN PRESSURE RATING, 8'-0" MAXIMUM MULLION SPACING. VALID FOR CONNECTION TO CONCRETE W/ HILTI INC KWIK BOLT TZ ANCHORS.

* SIDE RAIL D NOT SHOWN FOR CLARITY

◊ END & INTERIOR WALL MOUNTED MULLION INSTALLATION

APPLICABLE TO A LIMITED LOAD, MULLION SPAN AND MULLION SPACING INSTALLATIONS

SCALE: 1/8" = 1"

WALTER A. TILLIT JR. LICENSE No. 44167 STATE OF FLORIDA PROFESSIONAL ENGINEER

P.E. SEAL/SIGNATURE/DATE

© 2020 TILTECO INC.

TILTECO INC.
TILLIT TESTING & ENGINEERING COMPANY
6355 N.W. 36th. St., Ste. 305, VIRGINIA GARDENS, Fl. 33166
Phone : (305)871-1530 . Fax : (305)871-1531
e-mail: tilteco@aol.com
CA-0006719
WALTER A. TILLIT Jr. P.E.
FLORIDA Lic. # 44167

FLORIDA BUILDING CODE (Non High Velocity Hurricane Zone)

Nautilus
Rolling Shutter System

EXPERT SHUTTER SERVICES INC.
668 S.W. WHITMORE DRIVE
PORT ST. LUCIE, FL. 34984
PHONE: (800) 749-9056 , FAX: (772) 871-0990

REV. No	DESCRIPTION	DATE	REV. No	DESCRIPTION	DATE
1	OLD 17-244	06/8/2020	4		
2			5		

DRAWN BY: M.P.
06/8/2020 DATE
20-064 DRAWING No
SHEET 11A OF 26

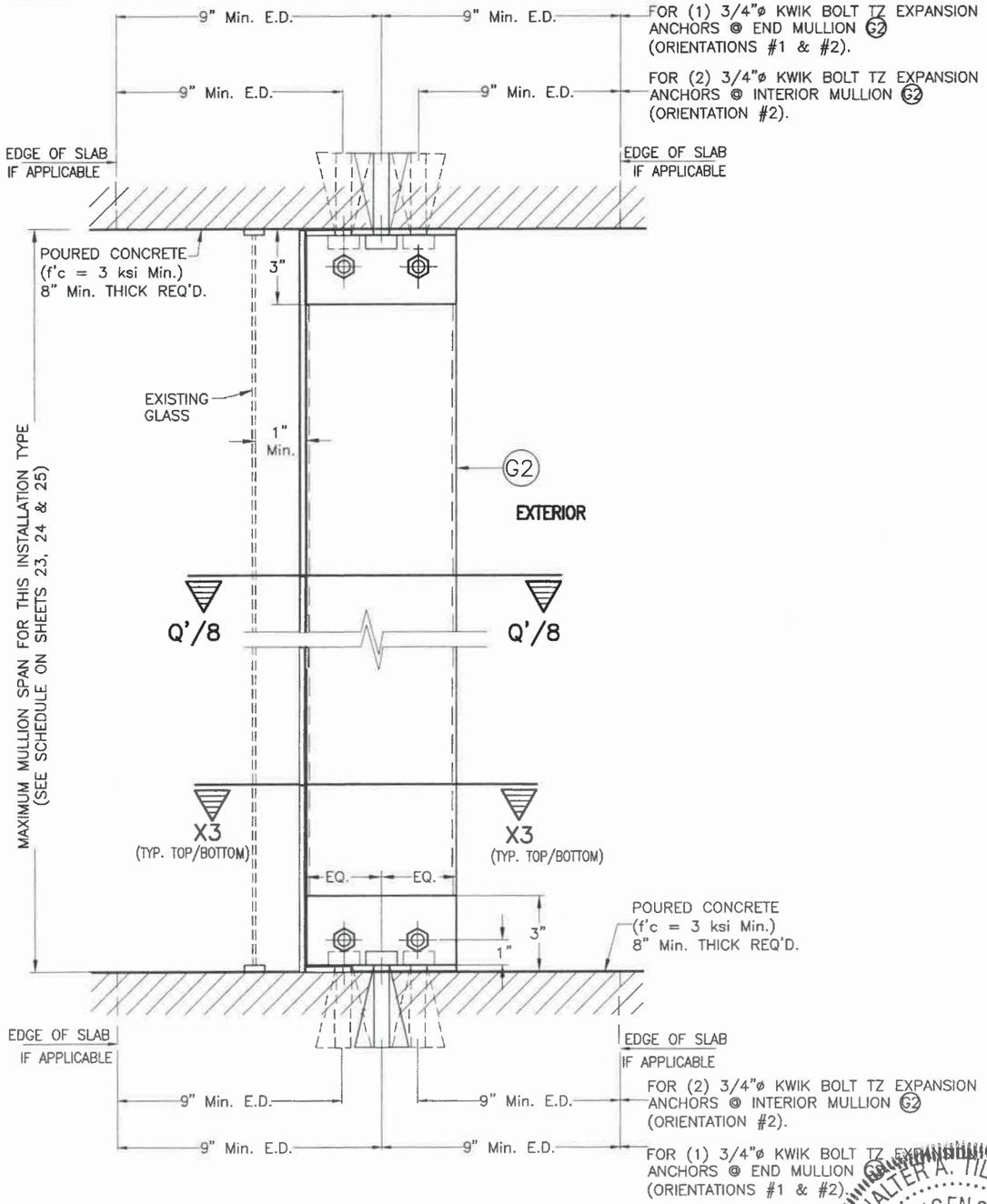

FLOOR TO CEILING / TRAPPED MOUNTING : MULLION G2

SECTION W-3

END & INTERIOR TRAPPED MOUNTED MULLION INSTALLATION *

SCALE: 1/8" = 1"

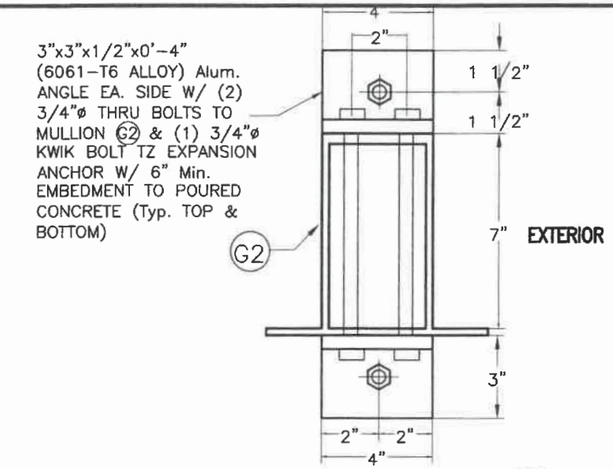

SECTION X3-X3 W/ G2 *

(END MULLION ONLY)

(W/ ORIENTATION # 1)

(7"x4")

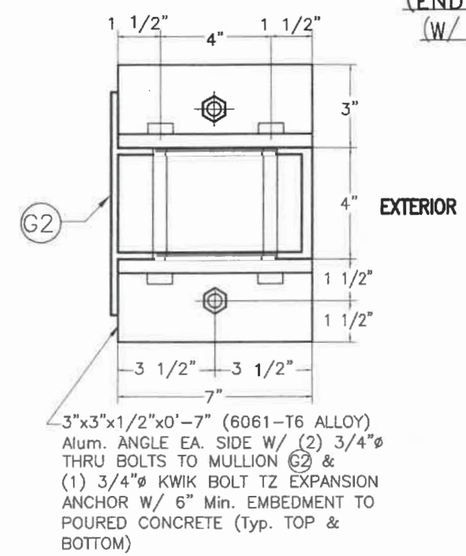

(END MULLION ONY)

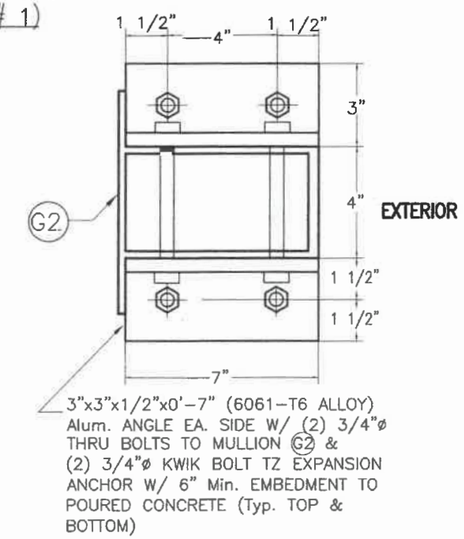

(INTERIOR MULLION ONLY)

ALTERNATIVE SECTIONS X3-X3 W/ G2*

(W/ ORIENTATION # 2)

(4"x7")

* SIDE RAIL D AND BOX NOT SHOWN FOR CLARITY.

FLORIDA BUILDING CODE (Non High Velocity Hurricane Zone)

WALTER A. TILLIT JR. LICENSE No. 44167 STATE OF FLORIDA PROFESSIONAL ENGINEER

6/11/2020

P.E. SEAL/SIGNATURE/DATE

© 2020 TILTECO INC.

TILTECO INC.
TILLIT TESTING & ENGINEERING COMPANY
6355 N.W. 36th. St., Ste. 305, VIRGINIA GARDENS, FL 33166
Phone : (305)871-1530 . Fax : (305)871-1531
e-mail: tilteco@aol.com
CA-0006719
WALTER A. TILLIT Jr. P.E.
FLORIDA Lic. # 44167

Nautilus Rolling Shutter System

EXPERT SHUTTER SERVICES INC.
668 S.W. WHITMORE DRIVE
PORT ST. LUCIE, FL. 34984
PHONE: (800) 749-9056 , FAX: (772) 871-0990

REV. No	DESCRIPTION	DATE	REV. No	DESCRIPTION	DATE
1	OLD 17-244	06/8/2020	4		
2			5		

DRAWN BY: M.P.

06/8/2020 DATE

20-064 DRAWING No

SHEET 12 OF 26

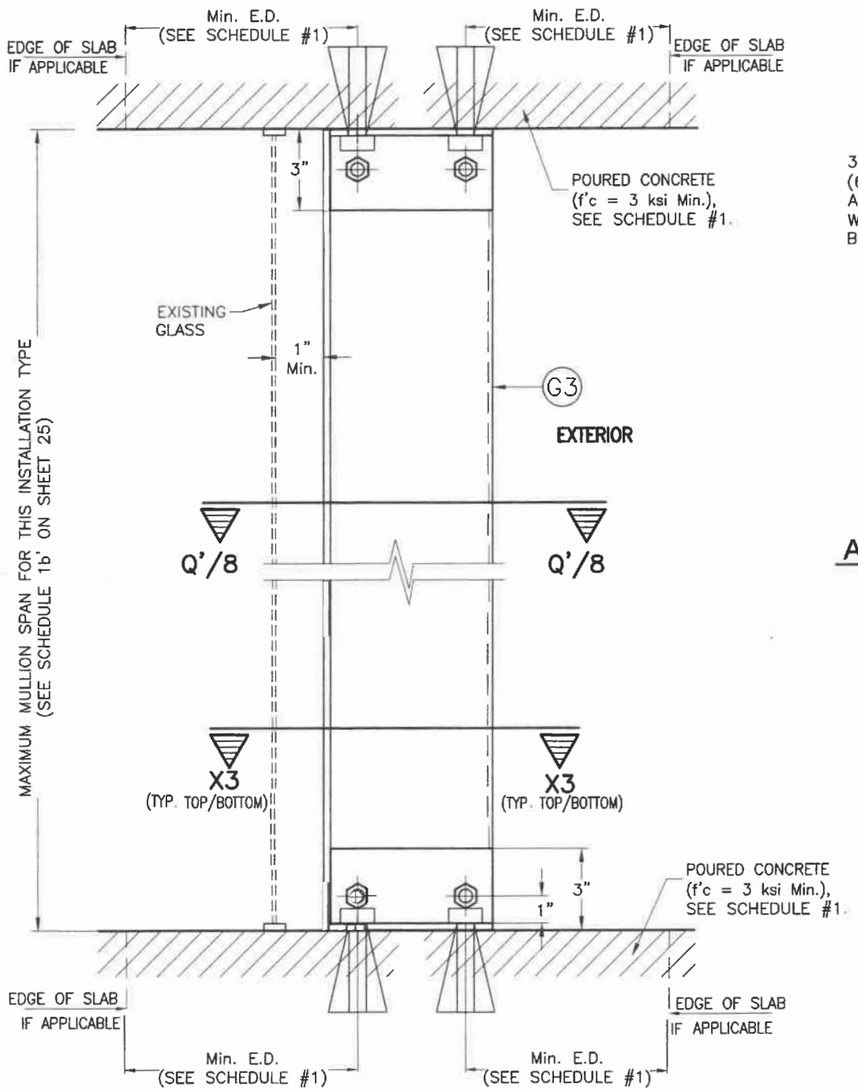

FLOOR TO CEILING / TRAPPED MOUNTING : MULLIONS (G3)
SECTION W-3

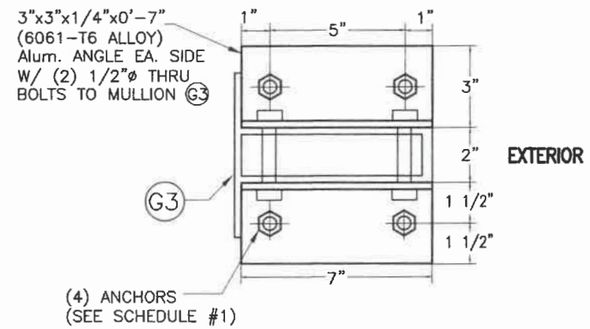

ALTERNATIVE SECTION X3-X3 W/ (G3) *
(W/ ORIENTATION # 2)
(2"x7" INTERIOR MULLION ONLY)

* SIDE RAIL (D) AND BOX NOT SHOWN FOR CLARITY.

◊ SEE MAXIMUM (G3) (INTERIOR) TRAPPED MOUNTED MULLIONS SPAN COVERED BY SCHEDULE 1b' FOR INSTALLATION CASES **I, Ia & II** ON SHEET 25.
(LIMITED LOAD, MULLION SPACING AND SPAN INSTALLATION):

INSTALLATION CASE I – RESIDENTIAL AND COMMERCIAL APPLICATIONS WITH ±60.8 p.s.f. MAXIMUM A.S.D. DESIGN PRESSURE RATING, 12'-0" MAXIMUM MULLION SPACING.
SEE SCHEDULE #1 FOR ADDITIONAL SPECS.

INSTALLATION CASE Ia – RESIDENTIAL AND COMMERCIAL APPLICATION W/ ±60.8 p.s.f. MAXIMUM A.S.D. DESIGN PRESSURE RATING, 8'-0" MAXIMUM MULLION SPACING.
SEE SCHEDULE #1 FOR ADDITIONAL SPECS.

INSTALLATION CASE II – COMMERCIAL APPLICATION FOR ±100.0 p.s.f. MAXIMUM A.S.D. DESIGN PRESSURE RATING, 8'-0" MAXIMUM MULLION SPACING. SEE SCHEDULE #1 FOR ADDITIONAL SPECS.

SCHEDULE #1

INSTALLATION CASES	MIN. SLAB THICKNESS REQ'D.	ANCHOR TYPE & SIZE (TYP. TOP & BOTTOM)	MIN. ANCHOR EMBEDMENT	MIN. EDGE DISTANCE FOR ANCHOR
I	4"	3/8"ø HILTI INC HUS-H SCREW, 3/8"ø POWER FASTENER WEDGE- BOLT ANCHOR	2 1/2"	5 1/2"
Ia	4"	1/2"ø HILTI INC KWIK BOLT TZ	2 1/2"	5 1/2"
II	6"	1/2"ø HILTI INC KWIK BOLT TZ	3 1/4"	7 1/2"

FLORIDA BUILDING CODE (Non High Velocity Hurricane Zone)

◊ INTERIOR TRAPPED MOUNTED MULLION INSTALLATION *
APPLICABLE TO A LIMITED LOAD, MULLION SPAN AND MULLION SPACING INSTALLATIONS

SCALE: 1/8" = 1"

WALTER A. TILLIT JR. LICENSE No. 44167 STATE OF FLORIDA PROFESSIONAL ENGINEER

P.E. SEAL/SIGNATURE/DATE

© 2020 TILTECO INC.

TILTECO INC.
TILLIT TESTING & ENGINEERING COMPANY
6355 N.W. 36th. St., Ste. 305, VIRGINIA GARDENS, Fl. 33166
Phone : (305)871-1530 . Fax : (305)871-1531
e-mail: tilteco@aol.com
CA-0006719
WALTER A. TILLIT Jr. P.E.
FLORIDA Lic. # 44167

Nautilus
Rolling Shutter System

EXPERT SHUTTER SERVICES INC.
668 S.W. WHITMORE DRIVE
PORT ST. LUCIE, FL. 34984
PHONE: (800) 749-9056 , FAX: (772) 871-0990

REV. No	DESCRIPTION	DATE	REV. No	DESCRIPTION	DATE
1	OLD 17-244	06/8/2020	4		
2			5		

DRAWN BY: M.P.
06/8/2020 DATE
20-064 DRAWING No
SHEET 12A OF 26

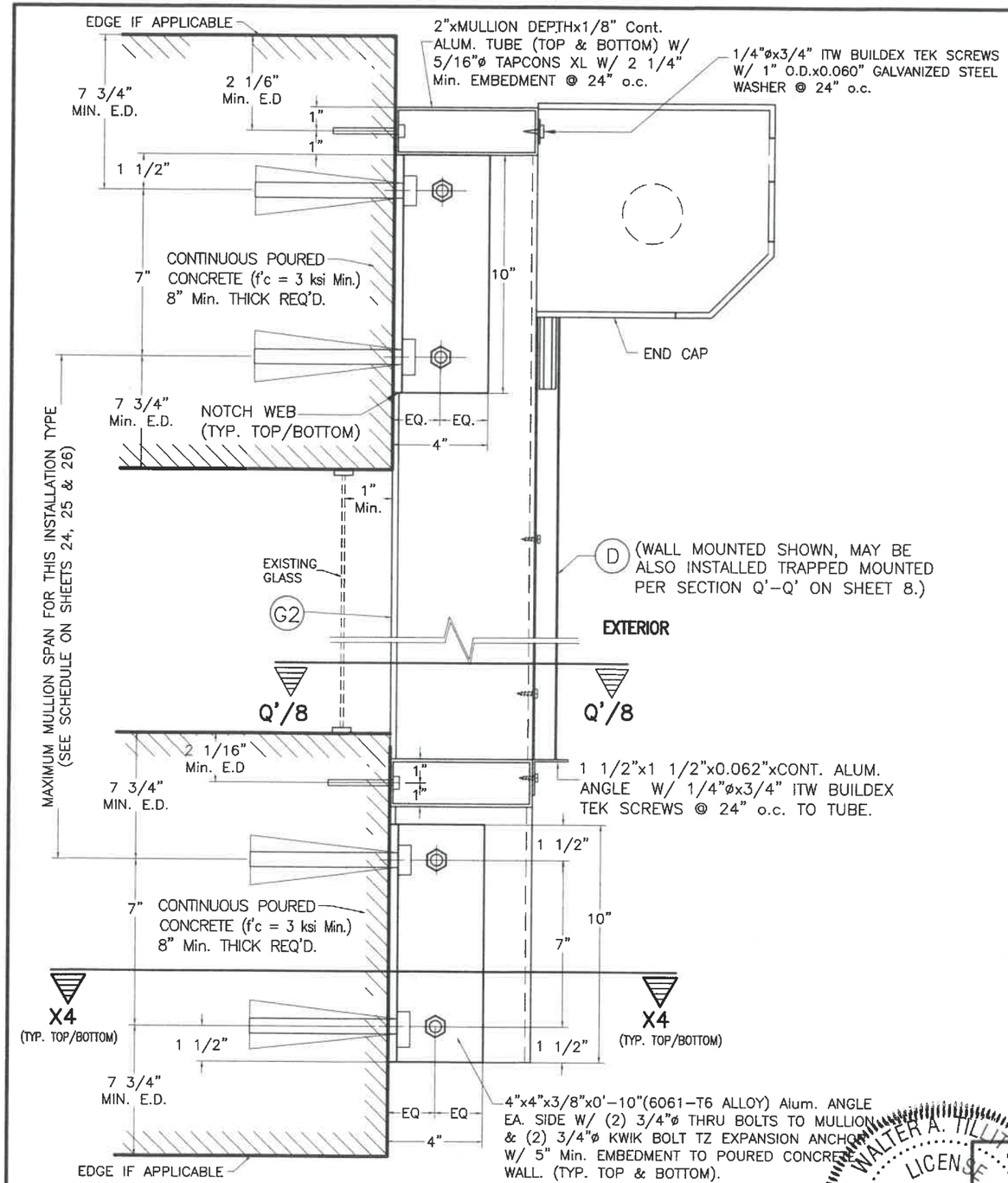

WALL MOUNTING : MULLION G2
POURED CONCRETE WALL
SECTION W-4

END & INTERIOR WALL MOUNTED MULLION INSTALLATION

SCALE: 1/8" = 1"

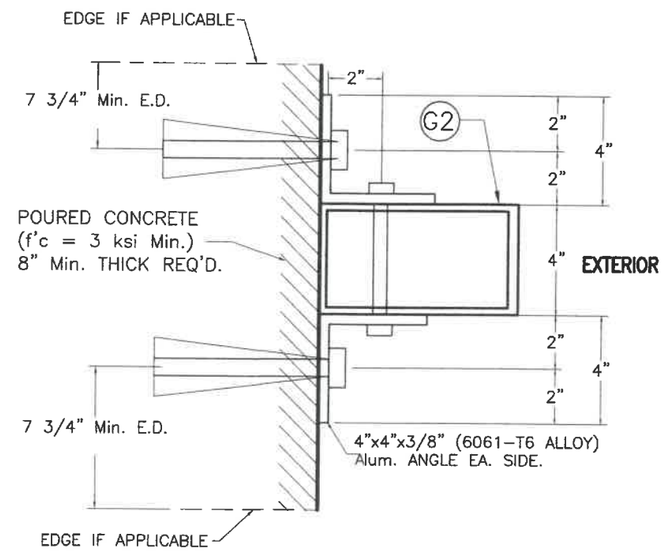

SECTION X4-X4 W/ G2 *

(END & INTERIOR MULLION)
(W/ ORIENTATION # 2)
(4"x7")

* SIDE RAIL D NOT SHOWN FOR CLARITY

FLORIDA BUILDING CODE (Non High Velocity Hurricane Zone)

WALTER A. TILLIT JR. LICENSE No. 44167 STATE OF FLORIDA PROFESSIONAL ENGINEER

06/11/2020

SIG. SEAL/SIGNATURE/DATE

© 2020 TILTECO INC.

TILTECO INC.
TILLIT TESTING & ENGINEERING COMPANY
6355 N.W. 36th. St., Ste. 305, VIRGINIA GARDENS, Fl. 33166
Phone : (305)871-1530 . Fax : (305)871-1531
e-mail: tilteco@aol.com
CA-0006719
WALTER A. TILLIT Jr. P.E.
FLORIDA Lic. # 44167

Nautilus
Rolling Shutter System

EXPERT SHUTTER SERVICES INC.
668 S.W. WHITMORE DRIVE
PORT ST. LUCIE, FL. 34984
PHONE: (800) 749-9056 , FAX: (772) 871-0990

REV. No	DESCRIPTION	DATE	REV. No	DESCRIPTION	DATE
1	OLD 17-244	06/8/2020	4		
2			5		

DRAWN BY: M.P.
06/8/2020 DATE
20-064 DRAWING No
SHEET 13 OF 26

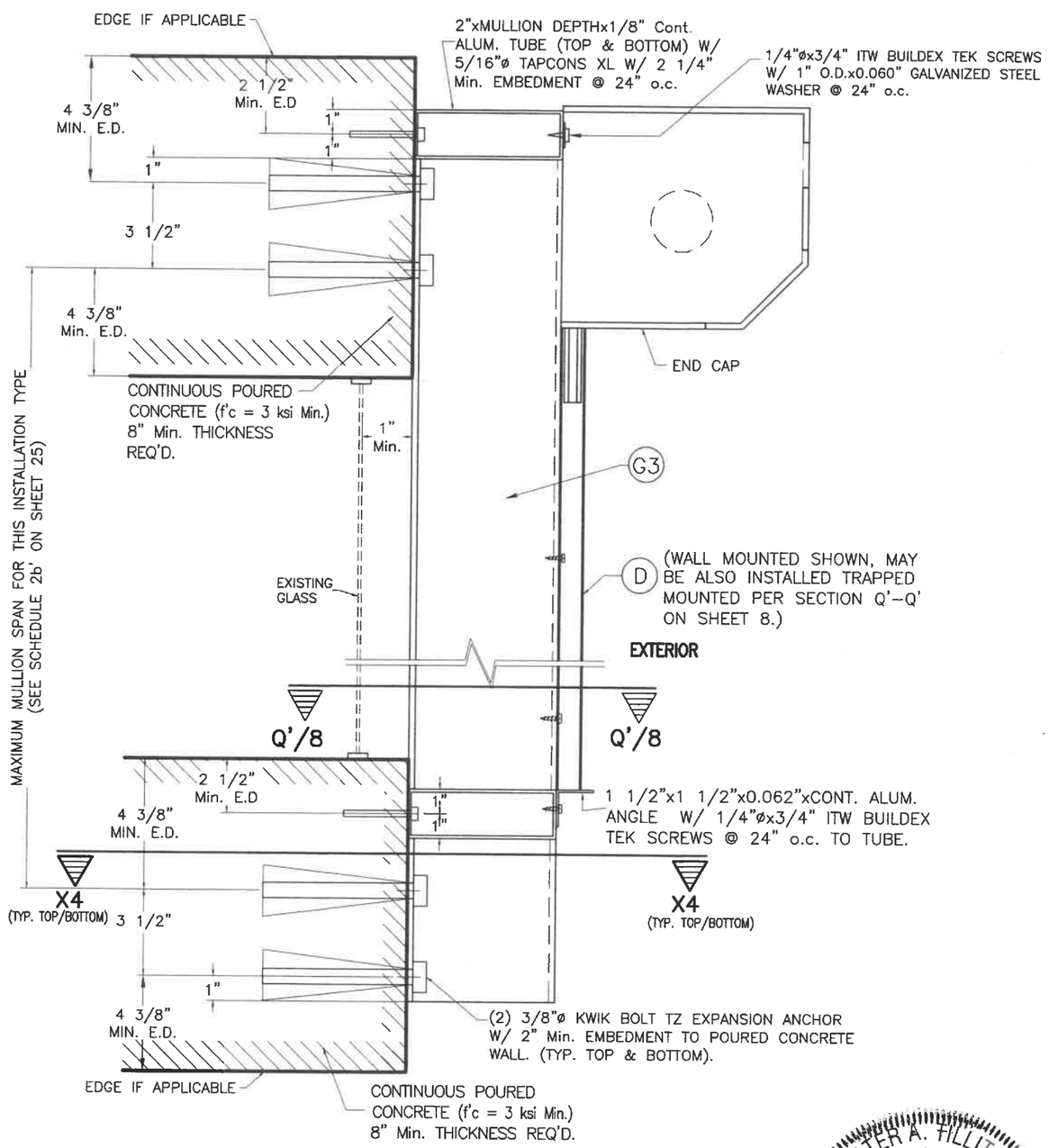

WALL MOUNTING : MULLION G3
POURED CONCRETE WALL
SECTION W-4

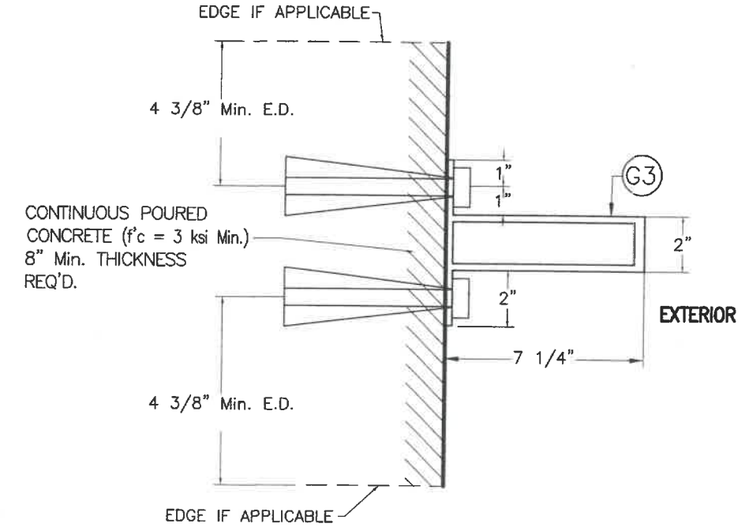

SECTION X4-X4 W/ G3 *
(INTERIOR MULLION)
(W/ ORIENTATION # 2)
(2"x7")

◊ SEE MAXIMUM G3 (INTERIOR) WALL MOUNTED MULLION SPAN COVERED BY SCHEDULE 2b' FOR INSTALLATION CASES I' & II' ON SHEET 25 (LIMITED LOAD, MULLION SPACING AND SPAN INSTALLATION):

INSTALLATION CASE I' – RESIDENTIAL AND COMMERCIAL APPLICATIONS WITH ±60.8 p.s.f. MAXIMUM A.S.D. DESIGN PRESSURE RATING, 12'-0" MAXIMUM MULLION SPACING. VALID FOR CONNECTION TO CONCRETE W/ HILTI INC HUS-H OR POWER FASTENERS WEDGE-BOLT ANCHORS.

INSTALLATION CASE II' – COMMERCIAL APPLICATION FOR ±100.0 p.s.f. MAXIMUM A.S.D. DESIGN PRESSURE RATING, 8'-0" MAXIMUM MULLION SPACING. VALID FOR CONNECTION TO CONCRETE W/ HILTI INC KWIK BOLT TZ ANCHORS.

* SIDE RAIL D NOT SHOWN FOR CLARITY

FLORIDA BUILDING CODE (Non High Velocity Hurricane Zone)

◊ INTERIOR WALL MOUNTED MULLION INSTALLATION *
APPLICABLE TO A LIMITED LOAD, MULLION SPAN AND MULLION SPACING INSTALLATIONS

SCALE: 1/8" = 1"

WALTER A. TILLIT JR. LICENSE No. 44167 STATE OF FLORIDA PROFESSIONAL ENGINEER

P.E. SEAL/SIGNATURE/DATE

© 2020 TILTECO INC.

TILTECO INC.
TILLIT TESTING & ENGINEERING COMPANY
6355 N.W. 36th. St., Ste. 305, VIRGINIA GARDENS, Fl. 33166
Phone : (305)871-1530 . Fax : (305)871-1531
e-mail: tilteco@aol.com
CA-0006719
WALTER A. TILLIT Jr. P.E.
FLORIDA Lic. # 44167

Nautilus Rolling Shutter System

EXPERT SHUTTER SERVICES INC.
668 S.W. WHITMORE DRIVE
PORT ST. LUCIE, FL. 34984
PHONE: (800) 749-9056 , FAX: (772) 871-0990

REV. No	DESCRIPTION	DATE	REV. No	DESCRIPTION	DATE
1	OLD 17-244	06/8/2020	4		
2			5		

DRAWN BY: M.P.
06/8/2020 DATE
20-064 DRAWING No
SHEET 13A OF 26

TYPICAL MANDATORY PROCEDURE FOR VERIFYING PRODUCT CODE COMPLIANCE RELATED TO ITS INSTALLATION INTO EXISTING POURED CONCRETE OR GROUT FILLED CELL CONCRETE BLOCK STRUCTURES (*)

STEP 1: OBTAIN JOB SITE'S A.S.D. DESIGN PRESSURE RATING (p.s.f.) FOR THE OPENING AND DESIRED SLAT SPAN "L" (ft) TO PROTECT IT (SEE GENERAL NOTE #2, SHEET 1).

STEP 2: ENTER TO CHARTS (Ia, Ib & Ib') THRU IC ON SHEET 15 TO DETERMINE, BASED ON AN 1/2" SLAT SLIP (in), ANCHOR TYPE AT SIDE RAILS; A.S.D. DESIGN PRESSURE RATING (p.s.f.); THE REQUIRED MAX SLAT SPAN "L" ft .

THE FOLLOWING INFORMATION IS PROVIDED AT CHARTS I THRU IC TO PROCEED WITH PRODUCT INSTALLATION VERIFICATION:

- ENTER A.S.D. DESIGN PRESSURE RATING: SEE STEP (1) ABOVE.
- FOR A SPECIFIC PRODUCT MOUNTING INSTALLATION TYPE, INCLUDING ANCHOR TYPE, THE FOLLOWING DEFINITION FOR SLAT SPAN SHALL BE CONSIDERED:

  LMAX: THIS IS THE MAXIMUM ALLOWABLE SLAT SPAN FOR WHICH A GIVEN 1/2" SLAT SLIP MAY BE USED, FOR A GIVEN A.S.D. DESIGN PRESSURE RATING.

- MINIMUM REQUIRED SEPARATION TO GLASS IS PROVIDED ON CHART Ic: PROVIDES SEPARATION TO GLASS FOR PRODUCTS W/O OR W/ STORM BARS (SEE STEP 4).

STEP 3: OBTAIN INFORMATION ON PRODUCT'S SIDE RAIL ANCHOR SPACING REQUIREMENTS FOR CONNECTION TO EXISTING STRUCTURE FROM ANCHOR SCHEDULES Va, Vb & Vb' ON SHEETS 16 THRU 18. ENTER SCHEDULES WITH FINALLY DETERMINED ANCHOR TYPE, SUBSTRATE, MOUNTING TYPE, A.S.D. DESIGN PRESSURE RATING & SLAT SPAN AND OBTAIN MAXIMUM ANCHOR SPACING (INCHES ON CENTERS). SEE GENERAL NOTE 7 ON SHEET 1 FOR ANCHOR SPECS.

STEP 4: IF PRODUCT INSTALLATION INCLUDES STORM BARS, MULLIONS OR STORM BARS & MULLIONS, THE FOLLOWING MANDATORY ADDITIONAL PROCEDURES ARE APPLICABLE.

PROCEDURE 4a: IF STORM BARS ARE USED

1. MINIMUM SEPARATION TO GLASS FOR SLATS IF STORM BARS ARE USED SHALL BE BASED ON CHART Ic, ON SHEET 15, IT SHALL BE MEASURED FROM BACK OF SLATS TO GLASS.
2. ENTER TABLE 1 ON SHEET 22 W/ A.S.D DESIGN LOAD ; STORM BAR SPACING AND DETERMINE MAXIMUM ALLOWABLE STORM BAR SPAN (HEIGHT).
3. ENTER TABLES 2 OR 3 ON SHEET 23, WITH A.S.D. DESIGN PRESSURE RATING AND STORM BAR SPACING AND DETERMINE APPLICABLE OPTIONS FOR STORM BAR CONNECTION TO CONCRETE TOP & BOTTOM. OPTIONS PROVIDE ANCHOR SPECS AT ANCHORS TYPE LEGEND FOR VARIOUS ANCHOR TYPES COVERING PERMANENT (ANCHORS A & D) OR REMOVABLE (ANCHORS B & C) INSTALLATIONS & A CHOICE OF 2 OR 4 ANCHORS PER CONNECTION DEPENDING ON LOAD AND STORM BAR SPACING.

PROCEDURE 4b: IF MULLIONS ARE USED BUT W/O STORM BARS

1. MINIMUM SEPARATION TO GLASS FOR SLATS IF MULLIONS ARE USED BUT W/O STORM BARS SHALL BE BASED ON CHART Ic ON SHEET 15. IT SHALL BE MEASURED FROM BACK OF SLATS TO GLASS.
2. ENTER SCHEDULES 1a THRU 2c ON SHEETS 24, 25 & 26 W/ A.S.D. DESIGN LOAD ; MAXIMUM MULLION SPACING (MAX., 12', 8' OR 7'), AND DETERMINE MAXIMUM MULLION SPAN (HEIGHT) W/ ALLOWABLE INTERPOLATION IN BETWEEN SPACINGS FOR A GIVEN (G, G1, G2 & G3), MULLION TYPE & MULLION ORIENTATION.
3. SEE SHEETS 10, 10A, 11, 11A, 12, 12A, 13 & 13A FOR REQUIRED MULLION CONNECTION DETAILS AT TOP & BOTTOM FOR FLOOR TO CEILING (TRAPPED) OR WALL MOUNTINGS OF MULLIONS INTO CONCRETE FOR A GIVEN MULLION TYPE (G, G1, G2 & G3).

PROCEDURE 4c: IF BOTH STORM BARS & MULLIONS ARE USED

1. MINIMUM SEPARATION TO GLASS FOR SLATS IF BOTH STORM BARS AND MULLIONS ARE USED SHALL BE BASED ON CHART Ic, ON SHEET 15, IT SHALL BE MEASURED FROM BACK OF SLATS TO GLASS.
2. ENTER TABLE 1 ON SHEET 22 W/ A.S.D. DESIGN LOAD AND STORM BAR SPACING AND DETERMINE MAXIMUM STORM BAR SPAN (HEIGHT).
3. ENTER TABLES 2 OR 3 ON SHEET 23, WITH A.S.D. DESIGN PRESSURE RATING AND STORM BAR SPACING AND DETERMINE APPLICABLE OPTIONS FOR STORM BAR CONNECTION TO CONCRETE TOP & BOTTOM. OPTIONS PROVIDE ANCHOR SPECS AT ANCHORS TYPE LEGEND FOR VARIOUS ANCHOR TYPES COVERING PERMANENT (ANCHORS A & D) OR REMOVABLE (ANCHORS B & C) INSTALLATIONS & A CHOICE OF 2 OR 4 ANCHORS PER CONNECTION DEPENDING ON LOAD AND STORM BAR SPACING.
4. ENTER SCHEDULES 1a THRU 2c ON SHEETS 24, 25 & 26 W/ A.S.D. DESIGN PRESSURE RATING ; MAXIMUM MULLION SPACING (MAX., 12', 8' OR 7'), AND DETERMINE MAXIMUM MULLION SPAN (HEIGHT) W/ ALLOWABLE INTERPOLATION IN BETWEEN SPACINGS FOR A GIVEN (G, G1, G2 & G3), MULLION TYPE & MULLION ORIENTATION.
5. SEE SHEETS 10, 10A, 11, 11A, 12, 12A, 13 & 13A FOR MULLION CONNECTION DETAILS AT TOP & BOTTOM FOR FLOOR TO CEILING (TRAPPED) OR WALL MOUNTINGS OF MULLIONS INTO CONCRETE FOR A GIVEN MULLION TYPE (G, G1, G2 & G3).

* PROCEDURE PER STEPS 1 THRU 3 IS SIMILAR FOR INSTALLATIONS INTO WOOD FRAME STRUCTURES. SEE SHEETS 20 & 21 FOR LIMITATIONS APPLICABLE TO INSTALLATIONS INTO WOOD FRAME STRUCTURES.

FLORIDA BUILDING CODE (Non High Velocity Hurricane Zone)

WALTER A. TILLIT JR. LICENSE No. 44167 STATE OF FLORIDA PROFESSIONAL ENGINEER

6/11/2020

P.E. SEAL/SIGNATURE/DATE

© 2020 TILTECO INC.

TILTECO INC.
TILLIT TESTING & ENGINEERING COMPANY
6355 N.W. 36th. St., Ste. 305, VIRGINIA GARDENS, Fl. 33166
Phone : (305)871-1530 . Fax : (305)871-1531
e-mail: tilteco@aol.com
CA-0006719
WALTER A. TILLIT Jr. P.E.
FLORIDA Lic. # 44167

Nautilus Rolling Shutter System

EXPERT SHUTTER SERVICES INC.
668 S.W. WHITMORE DRIVE
PORT ST. LUCIE, FL. 34984
PHONE: (800) 749-9056 , FAX: (772) 871-0990

REV. No	DESCRIPTION	DATE	REV. No	DESCRIPTION	DATE
1	OLD 17-244	06/8/2020	4		
2			5		

DRAWN BY: M.P.

06/8/2020 DATE

20-064 DRAWING No

SHEET 14 OF 26

SLAT PERFORMANCE CHARTS Ia, Ib, Ib' & Ic: (ONLY VALID FOR 1/2" SLIP)

FOR A GIVEN A.S.D. DESIGN PRESSURE RATING (p.s.f), PRODUCT MOUNT CONDITION INCLUDING ANCHOR TYPE AND FOR INSTALLATIONS W/ OR W/O STORM BARS

	CHART Ia				CHART Ib				CHART Ib'				CHART Ic			
	USE MAXIMUM VALUE BETWEEN POSITIVE AND NEGATIVE A.S.D. LOAD												USE MAXIMUM POSITIVE A.S.D. LOAD VALUE			
	3/8"Ø KWIK BOLT 3 ANCHOR POURED CONCRETE				5/16"ø TAPCON XL ANCHOR TO POURED CONCRETE				5/16"ø TAPCON XL ANCHOR TO GROUT FILLED CELL CONCRETE BLOCK							
MAX. A.S.D. DESIGN PRESSURE RATING (psf)	MAX. SLAT SPAN "LMAX." (FT)				MAX. SLAT SPAN "LMAX." (FT)				MAX. SLAT SPAN "LMAX." (FT)				REQUIRED MIN. SEPARATION TO GLASS MEASURED TO BACK OF SLAT (in)			
	WALL MOUNT SEE NOTES *	TRAPPED MOUNT SEE NOTES *	BUILD-OUT MOUNT W/ (E1) & (E2) SEE NOTES *	BUILD-OUT MOUNT W/ (E3) SEE NOTES *	WALL MOUNT SEE NOTES *	TRAPPED MOUNT SEE NOTES *	BUILD-OUT MOUNT W/ (E1) & (E2) SEE NOTES *	BUILD-OUT MOUNT W/ (E3) SEE NOTES *	WALL MOUNT SEE NOTES *	TRAPPED MOUNT SEE NOTES *	BUILD-OUT MOUNT W/ (E1) & (E2) SEE NOTES *	BUILD-OUT MOUNT W/ (E3) SEE NOTES *	W/O STORM BARS		W/ STORM BARS	
													WIND ZONES 1-3	WIND ZONE 4	WIND ZONES 1-3	WIND ZONE 4
30.0	20'-0"	15'-4"	20'-0"	20'-0"	20'-0"	15'-4"	20'-0"	18'-0"	20'-0"	15'-4"	18'-0"	15'-6"	1"	14 1/2"	6"	7"
35.0	20'-0"	15'-3"	20'-0"	18'-0"	20'-0"	15'-0"	19'-0"	16'-3"	20'-0"	15'-0"	16'-3"	14'-0"	1"	14 1/2"	6"	7"
40.0	20'-0"	15'-2"	19'-7"	16'-6"	20'-0"	14'-5"	17'-4"	14'-10"	18'-11"	14'-5"	14'-10"	12'-9"	1"	14 1/2"	6"	7"
45.0	20'-0"	15'-0"	18'-0"	15'-3"	20'-0"	14'-2"	16'-0"	13'-9"	17'-4"	14'-2"	13'-9"	12'-0"	1"	14 1/2"	6"	7"
50.0	20'-0"	14'-10"	16'-9"	14'-2"	19'-1"	13'-1"	14'-10"	12'-10"	16'-2"	13'-1"	12'-9"	11'-0"	1"	14 1/2"	6"	7"
55.0	20'-0"	14'-8"	15'-8"	13'-4"	17'-9"	12'-4"	13'-11"	12'-1"	15'-0"	12'-4"	12'-0"	10'-6"	1"	14 1/2"	6"	7"
60.0	19'-5"	13'-9"	14'-9"	12'-7"	16'-9"	11'-8"	13'-2"	11'-5"	14'-2"	11'-8"	11'-4"	10'-0"	1"	14 1/2"	6"	7"
65.0	18'-4"	12'-11"	13'-11"	11'-11"	15'-9"	11'-0"	12'-5"	10'-11"	13'-4"	11'-0"	10'-10"	9'-6"	1"	14"	6"	7"
70.0	17'-4"	12'-1"	13'-3"	11'-4"	15'-0"	10'-6"	11'-10"	10'-4"	12'-9"	10'-6"	10'-4"	9'-0"	1"	13 1/2"	6"	7"
75.0	16'-6"	11'-7"	12'-7"	10'-10"	14'-3"	10'-0"	11'-4"	9'-11"	12'-0"	10'-0"	9'-10"	8'-10"	1"	13 1/2"	6"	7"
80.0	15'-9"	11'-0"	12'-0"	10'-5"	13'-7"	9'-5"	10'-10"	9'-7"	11'-7"	9'-5"	9'-3"	8'-6"	1"	13"	6"	7"
85.0	15'-0"	10'-6"	11'-7"	10'-0"	13'-0"	9'-3"	10'-5"	9'-3"	11'-2"	9'-3"	9'-0"	8'-3"	1"	13"	6"	7"
90.0	14'-2"	10'-1"	11'-2"	9'-8"	12'-6"	8'-10"	10'-1"	8'-11"	10'-9"	8'-10"	8'-10"	8'-0"	1"	12 1/2"	6"	7"
95.0	13'-5"	9'-8"	10'-9"	9'-4"	12'-0"	8'-5"	9'-9"	8'-7"	10'-4"	8'-5"	8'-6"	7'-9"	1"	12 1/2"	6"	7"
100.0	12'-9"	9'-4"	10'-5"	9'-1"	11'-8"	8'-4"	9'-5"	8'-4"	10'-0"	8'-4"	8'-3"	7'-6"	1"	12"	6"	7"
105.0	12'-2"	9'-0"	10'-1"	8'-9"	11'-3"	8'-0"	9'-2"	8'-2"	9'-8"	8'-0"	8'-0"	7'-4"	1"	11 1/2"	6"	7"
110.0	11'-7"	8'-8"	9'-9"	8'-6"	10'-11"	7'-10"	8'-10"	7'-11"	9'-3"	7'-10"	7'-9"	7'-2"	1"	11 1/2"	6"	7"
115.0	11'-1"	8'-5"	9'-6"	8'-4"	10'-7"	7'-8"	8'-8"	7'-8"	9'-0"	7'-8"	7'-8"	7'-0"	1"	11 1/2"	6"	7"
120.0	10'-8"	8'-1"	9'-3"	8'-2"	10'-3"	7'-5"	8'-5"	7'-6"	8'-11"	7'-5"	7'-5"	6'-10"	1"	11"	6"	7"
125.0	10'-2"	7'-9"	9'-0"	7'-11"	10'-0"	7'-2"	8'-2"	7'-4"	8'-8"	7'-2"	7'-3"	6'-8"	1"	11"	6"	7"
130.0	9'-10"	7'-6"	8'-9"	7'-9"	9'-9"	7'-0"	8'-0"	7'-2"	8'-5"	7'-0"	7'-2"	6'-6"	1"	10 1/2"	6"	7"
135.0	9'-5"	7'-2"	8'-6"	7'-7"	9'-6"	6'-10"	7'-10"	7'-1"	8'-2"	6'-10"	7'-0"	6'-5"	1"	10 1/2"	6"	7"
140.0	9'-1"	6'-11"	8'-4"	7'-5"	9'-1"	–	7'-8"	6'-11"	8'-0"	–	6'-10"	6'-4"	1"	10 1/2"	6"	7"
145.0	8'-10"	–	8'-2"	7'-3"	8'-10"	–	7'-6"	–	7'-10"	–	–	–	1"	10"	6"	7"
150.0	8'-6"	–	8'-0"	7'-2"	8'-6"	–	7'-4"	–	7'-9"	–	–	–	1"	10"	6"	7"
155.0	8'-3"	–	7'-10"	7'-0"	8'-3"	–	7'-2"	–	7'-7"	–	–	–	1"	10"	6"	7"
160.0	8'-0"	–	7'-8"	6'-10"	8'-0"	–	7'-1"	–	7'-5"	–	–	–	1"	10"	6"	7"

* **NOTES:**

1. ABOVE INDICATED MAX. SLAT SPANS MAY BE USED AS LONG AS ANCHOR SPACING SCHEDULES ON SHEETS 17 & 18 INDICATE THAT AN ANCHOR SPACING IS AVAILABLE FOR THE CORRESPONDING SLAT SPAN AND A.S.D. DESIGN PRESSURE RATING.
2. REQUIRES SIDE RAILS FASTENED TO EXISTING STRUCTURE WITH **3/8"ø KWIK BOLT 3 ANCHOR OR 5/16"ø TAPCON XL ANCHOR,** INTO POURED CONCRETE OR GROUT FILLED CELL CONCRETE BLOCK, OR WITH 1/4"ø TEK SCREWS AT MULLIONS CONNECTION. VALID FOR WALL MOUNTED, TRAPPED MOUNTED, AND BUILD-OUT MOUNTED.
3. MAXIMUM SLAT SPANS FOR INTERMEDIATE LOADS MAY BE DETERMINED BY LINEAR INTERPOLATION BETWEEN END VALUES.

WALTER A. TILLIT JR. LICENSE No. 44167 STATE OF FLORIDA PROFESSIONAL ENGINEER

6/11/2020

P.E. SEAL/SIGNATURE/DATE

© 2020 TILTECO INC.

TILTECO INC.
TILLIT TESTING & ENGINEERING COMPANY
6355 N.W. 36th. St., Ste. 305, VIRGINIA GARDENS, Fl. 33166
Phone : (305)871-1530 , Fax : (305)871-1531
e-mail: tilteco@aol.com
CA-0006719
WALTER A. TILLIT Jr. P.E.
FLORIDA Lic. # 44167

FLORIDA BUILDING CODE (Non High Velocity Hurricane Zone)

Nautilus Rolling Shutter System

EXPERT SHUTTER SERVICES INC.
668 S.W. WHITMORE DRIVE
PORT ST. LUCIE, FL. 34984
PHONE: (800) 749-9056 , FAX: (772) 871-0990

REV. No	DESCRIPTION	DATE	REV. No	DESCRIPTION	DATE
1	OLD 17-244	06/8/2020	4		
2			5		

DRAWN BY: M.P.
06/8/2020 DATE
20-064 DRAWING No
SHEET 15 OF 26

MAX. ANCHOR'S SPACING SCHEDULE Va

FOR A GIVEN PRODUCT MOUNTING TYPE, W/ 3/8"Ø KWIK BOLT 3 ANCHORS TO POURED CONCRETE WALL, A.S.D. DESIGN PRESSURE RATING & SLAT SPAN RANGE †

WALL MOUNT

MAX. A.S.D. DESIGN PRESSURE RATING RANGE (p.s.f)	SLAT SPAN RANGE							
	0'–4' †	> 4'–5' †	> 5'–6' †	> 6'–7' †	> 7'–9' †	> 9'–12' †	> 12'–16' †	> 16'–20' †
≤ 30.0	9"	9"	9"	9"	9"	9"	9"	9"
>31–40	9"	9"	9"	9"	9"	9"	9"	8"
>41–60	9"	9"	9"	9"	9"	9"	7"	5 5/8"
>61–80	9"	9"	9"	9"	9"	8"	5 5/8"	5 5/8"
>81–105	9"	9"	9"	9"	9"	6 1/2"	5 5/8"	–
>106–120	9"	9"	9"	9"	8"	6"	–	–
>121–140	9"	9"	9"	8"	7"	6"	–	–
>141–160	9"	9"	9"	7"	7"	–	–	–

TRAPPED MOUNT

MAX. A.S.D. DESIGN PRESSURE RATING RANGE (p.s.f)	SLAT SPAN RANGE							
	0'–4' †	> 4'–5' †	> 5'–6' †	> 6'–7' †	> 7'–9' †	> 9'–12' †	> 12'–16' †	> 16'–20' †
≤ 30.0	9"	9"	9"	9"	9"	9"	9"	–
>31–40	9"	9"	9"	9"	9"	9"	9"	–
>41–60	9"	9"	9"	9"	9"	9"	7 1/2"	–
>61–80	9"	9"	9"	9"	9"	8"	–	–
>81–105	9"	9"	9"	9"	8"	–	–	–
>106–120	9"	9"	9"	8 1/2"	8"	–	–	–
>121–140	9"	9"	9"	7"	–	–	–	–
>141–160	9"	9"	8"	6"	–	–	–	–

BUILD-OUT MOUNT

MAX. A.S.D. DESIGN PRESSURE RATING RANGE (p.s.f)	SLAT SPAN RANGE																							
	0'–4' †			> 4'–5' †			> 5'–6' †			> 6'–7' †			> 7'–9' †			> 9'–12' †			> 12'–16' †			> 16'–20' †		
	E1	E2	E3	E1	E2	E3	E1	E2	E3	E1	E2	E3	E1	E2	E3	E1	E2	E3	E1	E2	E3	E1	E2	E3
≤ 30.0	9"	9"	9"	9"	9"	9"	9"	9"	9"	9"	9"	9"	9"	9"	9"	9"	9"	9"	9"	9"	7 3/4"	7"	7"	5 5/8"
>31–40	9"	9"	9"	9"	9"	9"	9"	9"	9"	9"	9"	9"	9"	9"	9"	9"	9"	9"	7"	7"	6"	5 5/8"	5 5/8"	5 5/8"
>41–60	9"	9"	9"	9"	9"	9"	9"	9"	9"	9"	9"	9"	9"	9"	9"	7 1/2"	7 1/2"	6"	5 5/8"	5 5/8"	5 5/8"	5 5/8"	5 5/8"	–
>61–80	9"	9"	9"	9"	9"	9"	9"	9"	9"	9"	9"	9"	9"	9"	7"	5 5/8"	5 5/8"	5 5/8"	5 5/8"	5 5/8"	–	–	–	–
>81–105	9"	9"	9"	9"	9"	9"	9"	9"	9"	8"	8"	6 1/2"	6 3/4"	6 3/4"	5 5/8"	5 5/8"	5 5/8"	5 5/8"	–	–	–	–	–	–
>106–120	9"	9"	9"	9"	9"	9"	9"	9"	8"	8"	8"	6 1/2"	6"	6"	5 5/8"	5 5/8"	5 5/8"	–	–	–	–	–	–	–
>121–140	9"	9"	9"	9"	9"	7 1/2"	8"	8"	6 1/2"	8"	8"	6"	5 5/8"	5 5/8"	5 5/8"	–	–	–	–	–	–	–	–	–
>141–160	9"	9"	9"	8"	8"	6"	7"	7"	5 5/8"	6 3/4"	6 3/4"	5 5/8"	5 5/8"	5 5/8"	–	–	–	–	–	–	–	–	–	–

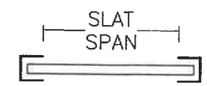

SLAT SPAN DEFINITION

† NOTE:
MAX. SLAT SPAN FOR A GIVEN A.S.D. DESIGN PRESSURE RATING SHALL NEVER EXCEED MAX. SLAT SPAN INDICATED ON SLAT PERFORMANCE CHART ON SHEET 15.

FLORIDA BUILDING CODE (Non High Velocity Hurricane Zone)

WALTER A. TILLIT JR. LICENSE No. 44167 STATE OF FLORIDA PROFESSIONAL ENGINEER

6/11/2020

SEAL/SIGNATURE/DATE

© 2020 TILTECO INC.

TILTECO INC.
TILLIT TESTING & ENGINEERING COMPANY
6355 N.W. 36th. St., Ste. 305, VIRGINIA GARDENS, Fl. 33166
Phone : (305)871-1530 . Fax : (305)871-1531
e-mail: tilteco@aol.com
CA-0006719
WALTER A. TILLIT Jr. P.E.
FLORIDA Lic. # 44167

Nautilus
Rolling Shutter System

EXPERT SHUTTER SERVICES INC.
668 S.W. WHITMORE DRIVE
PORT ST. LUCIE, FL. 34984
PHONE: (800) 749-9056 , FAX: (772) 871-0990

REV. No	DESCRIPTION	DATE	REV. No	DESCRIPTION	DATE
1	OLD 17-244	06/8/2020	4		
2			5		

DRAWN BY: M.P.

06/8/2020 DATE

20-064 DRAWING No

MAX. ANCHOR'S SPACING SCHEDULE Vb

FOR A GIVEN SHUTTER MOUNTING TYPE, W/ 5/16"Ø TAPCON XL ANCHORS TO POURED CONCRETE WALL

A.S.D. DESIGN LOAD & SLAT SPAN RANGE †

WALL MOUNT

MAXIMUM A.S.D. DESIGN PRESSURE RATING RANGE(psf)	SLAT SPAN RANGE							
	0'–4' †	> 4'–5' †	> 5'–6' †	> 6'–7' †	> 7'–9' †	> 9'–12' †	> 12'–16' †	> 16'–20' †
≤ 30.0	8"	8"	8"	8"	8"	8"	7 1/2"	5 1/2"
>31–40	8"	8"	8"	8"	8"	8"	6"	4"
>41–60	8"	8"	8"	8"	8"	6"	4"	3 3/4"
>61–80	8"	8"	8"	8"	7"	4 1/2"	3 3/4"	–
>81–105	8"	8"	8"	6 1/2"	5"	3 3/4"	3 3/4"	–
>106–120	8"	8"	8"	5 1/2"	4 1/2"	3 3/4"	–	–
>121–140	8"	7 1/2"	6"	4 1/2"	4"	3 3/4"	–	–
>141–160	8"	6"	5"	4"	4"	–	–	–

SLAT SPAN DEFINITION

† NOTE:
MAX. SLAT SPAN FOR A GIVEN A.S.D. DESIGN LOAD SHALL NEVER EXCEED MAX. SLAT SPAN INDICATED ON SLAT PERFORMANCE CHART ON SHEET 15.

TRAPPED MOUNT

MAXIMUM A.S.D. DESIGN PRESSURE RATING RANGE(psf)	SLAT SPAN RANGE							
	0'–4' †	> 4'–5' †	> 5'–6' †	> 6'–7' †	> 7'–9' †	> 9'–12' †	> 12'–16' †	> 16'–20' †
≤ 30.0	6"	6"	6"	6"	6"	6"	6"	5 1/2"
>31–40	6"	6"	6"	6"	6"	6"	5 1/2"	4 1/2"
>41–60	6"	6"	6"	6"	6"	5 1/2"	4"	4"
>61–80	6"	6"	6"	6"	6"	4"	4"	–
>81–105	6"	6"	6"	6"	4 3/4"	3 3/4"	3 3/4"	–
>106–120	6"	6"	6"	5"	4"	3 3/4"	–	–
>121–140	6"	6"	5 3/4"	4"	3 3/4"	3 3/4"	–	–
>141–160	6"	6"	5"	3 3/4"	3 3/4"	–	–	–

BUILD-OUT MOUNT

MAXIMUM A.S.D. DESIGN PRESSURE RATING RANGE(psf)	SLAT SPAN RANGE																							
	0'–4' †			> 4'–5' †			> 5'–6' †			> 6'–7' †			> 7'–9' †			> 9'–12' †			> 12'–16' †			> 16'–20' †		
	E1	E2	E3	E1	E2	E3	E1	E2	E3	E1	E2	E3	E1	E2	E3	E1	E2	E3	E1	E2	E3	E1	E2	E3
≤ 30.0	6"	6"	6"	6"	6"	6"	6"	6"	6"	6"	6"	6"	6"	6"	6"	6"	6"	6"	5 1/2"	5 1/2"	4 1/2"	4"	4"	3 3/4"
>31–40	6"	6"	6"	6"	6"	6"	6"	6"	6"	6"	6"	6"	6"	6"	6"	6"	6"	5"	4"	4"	3 3/4"	3 3/4"	3 3/4"	3 3/4"
>41–60	6"	6"	6"	6"	6"	6"	6"	6"	6"	6"	6"	6"	6"	6"	6"	4"	4"	3 3/4"	3 3/4"	3 3/4"	3 3/4"	–	–	–
>61–80	6"	6"	6"	6"	6"	6"	6"	6"	5 1/2"	6"	6"	5"	5"	5"	4"	3 3/4"	3 3/4"	–	3 3/4"	3 3/4"	–	–	–	–
>81–105	6"	6"	6"	6"	6"	6"	6"	6"	5 3/4"	4 1/2"	4 1/2"	3 3/4"	3 3/4"	3 3/4"	3 3/4"	3 3/4"	3 3/4"	–	–	–	–	–	–	–
>106–120	6"	6"	6"	6"	6"	5 1/2"	5 3/4"	5 3/4"	4 1/2"	4 1/2"	4 1/2"	3 3/4"	3 3/4"	3 3/4"	3 3/4"	–	–	–	–	–	–	–	–	–
>121–140	6"	6"	6"	5"	5"	4"	4 3/4"	4 3/4"	3 3/4"	4 1/2"	4 1/2"	3 3/4"	3 3/4"	3 3/4"	–	–	–	–	–	–	–	–	–	–
>141–160	6"	6"	5"	4 1/2"	4 1/2"	3 3/4"	4"	4"	–	4"	4"	–	3 3/4"	3 3/4"	–	–	–	–	–	–	–	–	–	–

FLORIDA BUILDING CODE (Non High Velocity Hurricane Zone)

WALTER A. TILLIT JR. LICENSE No. 44167 STATE OF FLORIDA PROFESSIONAL ENGINEER

6/11/2020

P.E. SEAL/SIGNATURE/DATE

© 2020 TILTECO INC.

TILTECO INC.
TILLIT TESTING & ENGINEERING COMPANY
6355 N.W. 36th. St., Ste. 305, VIRGINIA GARDENS, Fl. 33166
Phone : (305)871-1530 · Fax : (305)871-1531
e-mail: tilteco@aol.com
CA-0006719
WALTER A. TILLIT Jr. P.E.
FLORIDA Lic. # 44167

Nautilus
Rolling Shutter System

EXPERT SHUTTER SERVICES INC.
668 S.W. WHITMORE DRIVE
PORT ST. LUCIE, FL. 34984
PHONE: (800) 749-9056 , FAX: (772) 871-0990

REV. No	DESCRIPTION	DATE	REV. No	DESCRIPTION	DATE
1	OLD 17-244	06/8/2020	4		
2			5		

DRAWN BY: M.P.

06/8/2020 DATE

20-064 DRAWING No

MAX. ANCHOR'S SPACING SCHEDULE Vb

FOR A GIVEN PRODUCT MOUNTING TYPE, W/ 5/16"Ø TAPCON XL ANCHORS TO GROUT FILLED CELL CONCRETE BLOCK WALL, A.S.D. DESIGN PRESSURE RATING & SLAT SPAN RANGE †

WALL MOUNT

MAX. A.S.D. DESIGN PRESSURE RATING RANGE (p.s.f.)	SLAT SPAN RANGE							
	0'–4' †	> 4'–5' †	> 5'–6' †	> 6'–7' †	> 7'–9' †	> 9'–12' †	> 12'–16' †	> 16'–20' †
≤ 30.0	8"	8"	8"	8"	8"	8"	6"	4 1/2"
>31–40	8"	8"	8"	8"	8"	7"	4 1/2"	–
>41–60	8"	8"	8"	8"	8"	4 1/2"	–	–
>61–80	8"	8"	7 1/2"	7"	5 1/2"	–	–	–
>81–105	8"	8"	7 1/2"	5"	4"	–	–	–
>106–120	8"	7 1/2"	6"	4"	–	–	–	–
>121–140	8"	6"	5"	–	–	–	–	–
>141–160	7"	5"	4"	–	–	–	–	–

TRAPPED MOUNT

MAX. A.S.D. DESIGN PRESSURE RATING RANGE (p.s.f.)	SLAT SPAN RANGE							
	0'–4' †	> 4'–5' †	> 5'–6' †	> 6'–7' †	> 7'–9' †	> 9'–12' †	> 12'–16' †	> 16'–20' †
≤ 30.0	6"	6"	6"	6"	6"	6"	6"	–
>31–40	6"	6"	6"	6"	6"	6"	4 1/2"	–
>41–60	6"	6"	6"	6"	6"	4 1/2"	–	–
>61–80	6"	6"	6"	6"	5"	4 1/2"	–	–
>81–105	6"	6"	6"	4 1/2"	4 1/2"	–	–	–
>106–120	6"	6"	5 1/2"	4"	4 1/2"	–	–	–
>121–140	6"	5"	4 1/2"	3 3/4"	–	–	–	–
>141–160	6"	5"	4"	–	–	–	–	–

BUILD-OUT MOUNT

MAX. A.S.D. DESIGN PRESSURE RATING RANGE (p.s.f.)	SLAT SPAN RANGE																							
	0'–4' †			> 4'–5' †			> 5'–6' †			> 6'–7' †			> 7'–9' †			> 9'–12' †			> 12'–16' †			> 16'–20' †		
	E1	E2	E3	E1	E2	E3	E1	E2	E3	E1	E2	E3	E1	E2	E3	E1	E2	E3	E1	E2	E3	E1	E2	E3
≤ 30.0	6"	6"	6"	6"	6"	6"	6"	6"	6"	6"	6"	6"	6"	6"	6"	6"	6"	5 1/2"	4"	4 1/2"	–	–	–	–
>31–40	6"	6"	6"	6"	6"	6"	6"	6"	6"	6"	6"	6"	6"	6"	6"	5 1/2"	5"	4"	–	4"	–	–	–	–
>41–60	6"	6"	6"	6"	6"	6"	5 1/2"	5 1/2"	6"	6"	6"	6"	6"	5 1/2"	4 1/2"	–	–	–	–	3 3/4"	–	–	–	–
>61–80	6"	6"	6"	6"	6"	5 1/2"	5 1/2"	5 1/2"	4 1/2"	5"	5"	4"	4"	4"	–	–	–	–	–	3 3/4"	–	–	–	–
>81–105	6"	6"	6"	6"	6"	5 1/2"	5 1/2"	5 1/2"	4 1/2"	3 3/4"	3 3/4"	–	–	–	–	–	–	–	–	–	–	–	–	–
>106–120	6"	6"	6"	5 1/2"	5 1/2"	4 1/2"	4 1/2"	4 1/2"	3 3/4"	–	–	–	–	–	–	–	–	–	–	–	–	–	–	–
>121–140	6"	6"	5 1/2"	4"	4"	–	3 3/4"	3 3/4"	–	–	–	–	–	–	–	–	–	–	–	–	–	–	–	–
>141–160	5"	5"	4"	–	–	–	–	–	–	–	–	–	–	–	–	–	–	–	–	–	–	–	–	–

SLAT SPAN DEFINITION

† NOTE:
MAX. SLAT SPAN FOR A GIVEN A.S.D. DESIGN PRESSURE RATING SHALL NEVER EXCEED MAX. SLAT SPAN INDICATED ON SLAT PERFORMANCE CHART ON SHEET 15.

FLORIDA BUILDING CODE (Non High Velocity Hurricane Zone)

WALTER A. TILLIT JR. LICENSE No. 44167 STATE OF FLORIDA PROFESSIONAL ENGINEER

6/11/2020

P.E. SEAL/SIGNATURE/DATE

© 2020 TILTECO INC.

TILTECO INC.
TILLIT TESTING & ENGINEERING COMPANY
6355 N.W. 36th. St., Ste. 305, VIRGINIA GARDENS, Fl. 33166
Phone : (305)871-1530 , Fax : (305)871-1531
e-mail: tilteco@aol.com
CA-0006719
WALTER A. TILLIT Jr. P.E.
FLORIDA Lic. # 44167

Nautilus
Rolling Shutter System

EXPERT SHUTTER SERVICES INC.
668 S.W. WHITMORE DRIVE
PORT ST. LUCIE, FL. 34984
PHONE: (800) 749-9056 , FAX: (772) 871-0990

REV. No	DESCRIPTION	DATE	REV. No	DESCRIPTION	DATE
1	OLD 17-244	06/8/2020	4		
2			5		

DRAWN BY: M.P.
06/8/2020 DATE
20-064 DRAWING No
SHEET 18 OF 26

SCHEDULE Vc:

Vx FORCES (Lb/FT) & Vy FORCES (Lb/FT) ACTING AT JAMBS FOR AN A.S.D. DESIGN LOAD RANGE, SLAT SPAN RANGE FOR POURED CONCRETE OR GROUT FILLED CELL CONCRETE BLOCK WALL BUILDINGS

(USE MAXIMUM VALUE BETWEEN POSITIVE AND NEGATIVE A.S.D. LOAD)

MAXIMUM A.S.D. DESIGN PRESSURE RATING (psf)	SLAT SPAN RANGE															
	0'–4'		> 4'–5'		> 5'–6'		> 6'–7'		> 7'–9'		> 9'–12'		> 12'–16'		> 16'–20'	
	Vx	Vy	Vx	Vy	Vx	Vy	Vx	Vy	Vx	Vy	Vx	Vy	Vx	Vy	Vx	Vy
≤ 30.0	10	60	10	75	165	90	238	105	421	135	594	180	999	240	1390	300
>31–40	10	80	10	100	386	120	440	140	398	180	823	240	1328	320	1823	400
>41–60	10	120	290	150	794	180	509	210	708	270	1266	360	1962	480	2553	582
>61–80	10	160	616	200	767	240	796	280	1007	360	1695	480	2422	600	2547	596
>81–105	123	210	550	263	711	315	1142	368	1372	473	2009	591	2492	638	–	–
>106–120	313	240	728	300	881	360	1345	420	1587	540	2112	640	–	–	–	–
>121–140	552	280	960	350	1003	420	1612	490	1869	630	2039	635	–	–	–	–
>141–160	781	320	1186	400	1322	480	1873	560	1740	640	–	–	–	–	–	–

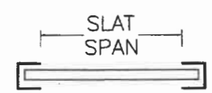

SLAT SPAN DEFINITION

* NOTE:
IT SHALL BE THE RESPONSIBILITY OF THE CONTRACTOR OR PERMIT HOLDER TO VERIFY THAT EXISTING STRUCTURE IS DESIGNED TO SUPPORT Vx AND Vy FORCES IN POUNDS PER UNIT FOOT OF SHUTTER HEIGHT AT BOTH JAMBS.
SEE THIS SHEET FOR Vx & Vy VALUES.

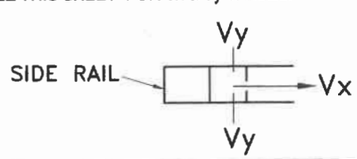

WALTER A. TILLIT JR. LICENSE No. 44167 STATE OF FLORIDA PROFESSIONAL ENGINEER

P.E. SEAL/SIGNATURE/DATE

© 2020 TILTECO INC.

TILTECO INC.
TILLIT TESTING & ENGINEERING COMPANY
6355 N.W. 36th. St., Ste. 305, VIRGINIA GARDENS, FL 33166
Phone : (305)871–1530 . Fax : (305)871–1531
e–mail: tilteco@aol.com
CA–0006719
WALTER A. TILLIT Jr. P.E.
FLORIDA Lic. # 44167

FLORIDA BUILDING CODE (Non High Velocity Hurricane Zone)

Nautilus Rolling Shutter System

EXPERT SHUTTER SERVICES INC.
668 S.W. WHITMORE DRIVE
PORT ST. LUCIE, FL. 34984
PHONE: (800) 749–9056 , FAX: (772) 871–0990

REV. No	DESCRIPTION	DATE	REV. No	DESCRIPTION	DATE
1	OLD 17–244	06/8/2020	4		
2			5		

DRAWN BY: M.P.
06/8/2020 DATE
20–064 DRAWING No
SHEET 19 OF 26

SLAT PERFORMANCE CHART Ib1 & Ic1: (ONLY VALID FOR 1/2" SLIP)

FOR A GIVEN MAXIMUM A.S.D. DESIGN PRESSURE RATING (p.s.f) AND PRODUCT MOUNT CONDITION FOR INSTALLATIONS W/O STORM BARS PER DETAIL 2 BELOW

CHART Ib1				CHART Ic1	
USE MAXIMUM VALUE BETWEEN POSITIVE AND NEGATIVE A.S.D. LOAD				USE MAXIMUM POSITIVE A.S.D. LOAD VALUE	
5/16"Ø TAPCON XL ANCHOR					
MAX. A.S.D. DESIGN PRESSURE RATING (p.s.f.)	MAX. SLAT SPAN "$L_{MAX.}$" (ft)			REQUIRED MIN. SEPARATION TO GLASS MESURED TO BACK OF SLAT (in)	
	WALL MOUNT (SEE NOTES Δ)	BUILD-OUT MOUNT W/ E2 (SEE NOTES Δ)	BUILD-OUT MOUNT W/ E3 (SEE NOTES Δ)	W/O STORM BARS	
				WIND ZONES 1-3	WIND ZONE 4
30.0 *	10'-0"	10'-0"	10'-0"	1"	7 1/2"
35.0 **	10'-0"	10'-0"	10'-0"	1"	7 1/2"
40.0 **	10'-0"	10'-0"	10'-0"	1"	7 1/2"
45.0 ***	10'-0"	10'-0"	10'-0"	1"	7 1/2"
50.0 ***	10'-0"	10'-0"	10'-0"	1"	7 1/2"
55.0 ***	10'-0"	10'-0"	10'-0"	1"	7 1/2"
60.0 ***	10'-0"	10'-0"	10'-0"	1"	7 1/2"

SLAT PERFORMANCE CHART IIb1 & IIc1: (ONLY VALID FOR 1/4" SLIP)

FOR A GIVEN MAXIMUM A.S.D. DESIGN PRESSURE RATING (p.s.f) AND PRODUCT MOUNT CONDITION FOR INSTALLATIONS W/O STORM BARS PER DETAIL 2 BELOW

CHART IIb1				CHART IIc1	
USE MAXIMUM VALUE BETWEEN POSITIVE AND NEGATIVE A.S.D. LOAD				USE MAXIMUM POSITIVE A.S.D. LOAD VALUE	
5/16"Ø TAPCON XL ANCHOR					
MAX. A.S.D. DESIGN PRESSURE RATING (p.s.f.)	REQUIRED MAX. SLAT SPAN "$L_{MAX.}$" (ft)			REQUIRED MIN. SEPARATION TO GLASS MESURED TO BACK OF SLAT (in)	
	WALL MOUNT (SEE NOTES Δ)	BUILD-OUT MOUNT W/ E2 (SEE NOTES Δ)	BUILD-OUT MOUNT W/ E3 (SEE NOTES Δ)	W/O STORM BARS	
				WIND ZONES 1-3	WIND ZONE 4
30.0 *	8'-3"	8'-3"	8'-3"	1"	5 1/8"
35.0 **	7'-9"	7'-9"	7'-9"	1"	5 1/8"
40.0 **	7'-7"	7'-7"	7'-7"	1"	5 1/8"
45.0 ***	7'-4"	7'-4"	7'-4"	1"	5 1/8"
50.0 ***	7'-3"	7'-3"	7'-3"	1"	5 1/8"
55.0 ***	7'-3"	7'-3"	7'-3"	1"	5 1/8"
60.0 ***	7'-3"	7'-3"	7'-3"	1"	5 1/8"

MAXIMUM SLAT SPAN AND MINIMUM SEPARATION TO GLASS FOR A GIVEN WOOD GRADE, A.S.D. DESIGN PRESSURE RATING (p.s.f), SLAT SLIP 1/8" AND PRODUCT MOUNTING TYPE FOR WOOD FRAMES WALLS W/ 2"x4" STUDS, AS PER LIMITATIONS ON DETAIL 1

USE MAXIMUM VALUE BETWEEN POSITIVE AND NEGATIVE A.S.D. LOAD				USE MAXIMUM POSITIVE A.S.D. LOAD VALUE	
WOOD GRADE	MAX. A.S.D. DESIGN PRESSURE RATING (p.s.f.)	MAX. SLAT SPAN "$L_{MAX.}$" (ft)		REQUIRED MIN. SEPARATION TO GLASS MESURED TO BACK OF SLAT (in)	
		WALL MOUNT (SEE NOTES Δ)	BUILD-OUT MOUNT W/ E2 (SEE NOTES Δ)	W/O STORM BARS	
				WIND ZONES 1-3	WIND ZONE 4
SOUTHERN PINE #2 (G=0.55)	60	4'-5"	4'-5"	1"	5 1/2"
DOUGLAS-FIR-SOUTH (G=0.46)	60	4'-5"	4'-5"		
SPRUCE PINE-FIR-SITH (G=0.36)	60	4'-5"	4'-5"		

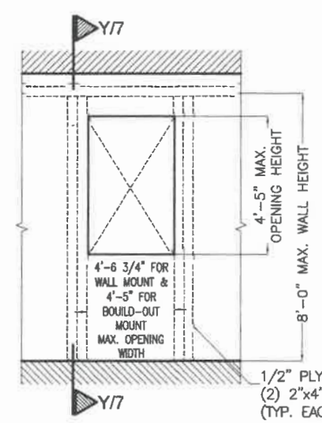

DETAIL 1 (ELEVATION)

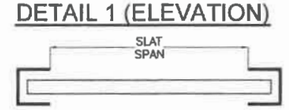

SLAT SPAN DEFINITION

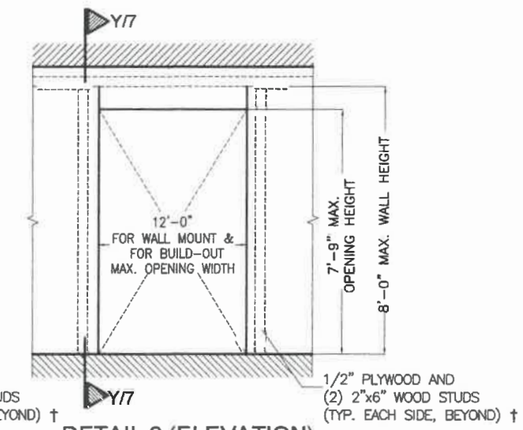

DETAIL 2 (ELEVATION)

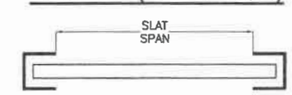

SLAT SPAN DEFINITION

SLAT PERFORMANCE CHART III1: (ONLY VALID FOR 1/2" SLIP)

FOR A GIVEN MAXIMUM A.S.D. DESIGN PRESSURE RATING (p.s.f) AND PRODUCT MOUNT CONDITION FOR INSTALLATIONS W/O STORM BARS PER DETAIL 2 BELOW

CHART IIIb1				CHART IIIc1	
USE MAXIMUM VALUE BETWEEN POSITIVE AND NEGATIVE A.S.D. LOAD				USE MAXIMUM POSITIVE A.S.D. LOAD VALUE	
5/16"Ø TAPCON XL ANCHOR					
MAX. A.S.D. DESIGN PRESSURE RATING (p.s.f.)	MAX. SLAT SPAN "$L_{MAX.}$" (FT)			REQUIRED MIN. SEPARATION TO GLASS MESURED TO BACK OF SLAT (in)	
	WALL MOUNT (SEE NOTES Δ)	BUILD-OUT MOUNT W/ E2 (SEE NOTES Δ)	BUILD-OUT MOUNT W/ E3 (SEE NOTES Δ)	W/O STORM BARS	
				WIND ZONES 1-3	WIND ZONE 4
30.0 *	12'-0"	12'-0"	12'-0"	1"	9"
35.0 **	12'-0"	12'-0"	12'-0"	1"	9"
40.0 **	12'-0"	12'-0"	12'-0"	1"	9"
45.0 ***	12'-0"	12'-0"	12'-0"	1"	9"

MAXIMUM A.S.D. DESIGN LOAD VS WOOD GRADE SCHEDULE:

* VALID FOR DOUGLAS-FIR-SOUTH (G=0.46)
SOUTHERN PINE #2 (G=0.55)
SPRUCE PINE-FIR-SITH (G=0.36)

** VALID FOR DOUGLAS-FIR-SOUTH (G=0.46)
SOUTHERN PINE #2 (G=0.55)

*** VALID FOR SOUTHERN PINE #2 (G=0.55)

Δ NOTES:

1. ABOVE INDICATED MAX. SLAT SPANS MAY BE USED AS LONG AS ANCHOR SPACING SCHEDULES ON SHEET 21 INDICATE THAT A SPACING IS AVAILABLE FOR THE CORRESPONDING SLAT SPAN AND A.S.D. DESIGN PRESSURE RATING.

†: WOOD FRAME WALL TO BE BUILT STRICTLY IN ACCORDANCE WITH SPECS GIVEN ON DETAIL AND PROVISIONS FROM CHAPTER 23 OF THE FLORIDA BUILDING CODE. MINIMUM LENGTH OF WALL AT EITHER SIDE OF OPENING SHALL BE 33".

FLORIDA BUILDING CODE (Non High Velocity Hurricane Zone)

INSTALLATION INTO WOOD FRAME STRUCTURES

WALTER A. TILLIT JR. LICENSE No. 44167 STATE OF FLORIDA PROFESSIONAL ENGINEER

6/11/2020

P.E. SEAL/SIGNATURE/DATE

© 2020 TILTECO INC.

TILTECO INC.
TILLIT TESTING & ENGINEERING COMPANY
6355 N.W. 36th. St., Ste. 305, VIRGINIA GARDENS, Fl. 33166
Phone : (305)871-1530 . Fax : (305)871-1531
e-mail: tilteco@aol.com
CA-0006719
WALTER A. TILLIT Jr. P.E.
FLORIDA Lic. # 44167

Nautilus
Rolling Shutter System

EXPERT SHUTTER SERVICES INC.
668 S.W. WHITMORE DRIVE
PORT ST. LUCIE, FL. 34984
PHONE: (800) 749-9056 , FAX: (772) 871-0990

REV. No	DESCRIPTION	DATE	REV. No	DESCRIPTION	DATE
1	OLD 17-244	06/8/2020	4		
2			5		

DRAWN BY: M.P.
06/8/2020 DATE
20-064 DRAWING No
SHEET 20 OF 26

MAX. ANCHOR'S SPACING SCHEDULE VI FOR A GIVEN PRODUCT MOUNTING TYPE, WOOD GRADE, A.S.D. DESIGN PRESSURE RATING (psf) AND SLAT SPAN RANGE *

WALL MOUNT & BUILD-OUT MOUNT TO 2"x4" WOOD STUD

(SEE DETAIL 1 ON SHEET 20)

WOOD GRADE	MAX.A.S.D. DESIGN PRESSURE RATING RANGE(p.s.f)	SLAT SPAN RANGE 0'-0" to 4'-5" *
SOUTHERN PINE #2 (G=0.55)	≤ 30.0	6"
	40	6"
	45	6"
	50	6"
	60	6"
DOUGLAS-FIR-SOUTH (G=0.46)	≤ 30.0	6"
	40	6"
SPRUCE PINE-FIR-SOUTH (G=0.36)	≤ 30.0	6"

WALL MOUNT TO 2"x6" WOOD STUD WITH MINIMUM 1/2" PLYWOOD

(SEE DETAIL 2 ON SHEET 20)

WOOD GRADE	MAX.A.S.D. DESIGN PRESSURE RATING RANGE(p.s.f)	SLAT SPAN RANGE						
		0' to 4' *	> 4' to 5' *	> 5' to 6' *	> 6' to 7' *	> 7' to 9' *	> 9' to 10' *	> 10' to 12' *
SOUTHERN PINE #2 (G=0.55)	≤ 30.0	6"	6"	6"	6"	6"	6"	5"
	40	6"	6"	6"	6"	6"	4 3/4"	4"
	45	6"	6"	6"	6"	5"	4"	3 1/2"
	50	6"	6"	6"	6"	4 3/4"	3 1/2"	–
	60	6"	6"	5 3/4"	5 1/4"	3 3/4"	3"	–
DOUGLAS-FIR-SOUTH (G=0.46)	≤ 30.0	6"	6"	6"	6"	6"	6"	5"
	40	6"	6"	6"	5 1/4"	5 1/4"	4 1/4"	4"
SPRUCE PINE-FIR-SOUTH (G=0.36)	≤ 30.0	6"	6"	6"	6"	6"	5 1/4"	4"

BUILD-OUT MOUNT TO 2"x6" WOOD STUD WITH MINIMUM 1/2" PLYWOOD

(SEE DETAIL 2 ON SHEET 20)

WOOD GRADE	MAX.A.S.D. DESIGN PRESSURE RATING RANGE(p.s.f)	SLAT SPAN RANGE													
		0'-4' *		> 4'-5' *		> 5'-6' *		> 6'-7' *		> 7'-9' *		> 9'-10' *		> 10'-12' *	
		BUILD-OUT MOUNT W/(E2)	BUILD-OUT MOUNT W/(E3)	BUILD-OUT MOUNT W/(E2)	BUILD-OUT MOUNT W/(E3)	BUILD-OUT MOUNT W/(E2)	BUILD-OUT MOUNT W/(E3)	BUILD-OUT MOUNT W/(E2)	BUILD-OUT MOUNT W/(E3)	BUILD-OUT MOUNT W/(E2)	BUILD-OUT MOUNT W/(E3)	BUILD-OUT MOUNT W/(E2)	BUILD-OUT MOUNT W/(E3)	BUILD-OUT MOUNT W/(E2)	BUILD-OUT MOUNT W/(E3)
SOUTHERN PINE #2 (G=0.55)	≤ 30.0	6"	6"	6"	6"	6"	6"	6"	6"	6"	6"	6"	6"	4 1/2"	4 1/2"
	40	6"	6"	6"	6"	6"	6"	6"	6"	6"	6"	5 1/4"	5 1/4"	4 1/2"	4 1/2"
	45	6"	6"	6"	6"	6"	6"	6"	6"	5 1/2"	5 1/4"	5"	5"	4"	4"
	50	6"	6"	6"	6"	6"	6"	6"	6"	5 1/4"	5 1/4"	4"	4"	–	–
	60	6"	6"	6"	6"	6"	6"	5 3/4"	5 3/4"	4"	4"	3"	3"	–	–
DOUGLAS-FIR-SOUTH (G=0.46)	≤ 30.0	6"	6"	6"	6"	6"	6"	6"	6"	6"	6"	6"	6"	5"	5"
	40	6"	6"	6"	6"	6"	6"	5 1/2"	5 1/2"	5 1/2"	5 1/2"	4 1/2"	4 1/2"	4"	4"
SPRUCE PINE-FIR-SOUTH (G=0.36)	≤ 30.0	6"	6"	6"	6"	6"	6"	6"	6"	6"	6"	5 1/4"	5"	4"	4"

* NOTE:
MAX. SPAN FOR SLAT FOR A GIVEN A.S.D. DESIGN PRESSURE RATING SHALL NEVER EXCEED MAX. SLAT SPAN INDICATED ON SLAT PERFORMANCE CHARTS ON SHEET 20.

WALTER A. TILLIT JR. LICENSE No. 44167 STATE OF FLORIDA PROFESSIONAL ENGINEER

P.E. SEAL/SIGNATURE/DATE

FLORIDA BUILDING CODE (Non High Velocity Hurricane Zone)

© 2020 TILTECO INC.

TILTECO INC.
TILLIT TESTING & ENGINEERING COMPANY
6355 N.W. 36th. St., Ste. 305, VIRGINIA GARDENS, Fl. 33166
Phone : (305)871-1530 . Fax : (305)871-1531
e-mail: tilteco@aol.com
CA-0006719
WALTER A. TILLIT Jr. P.E.
FLORIDA Lic. # 44167

Nautilus Rolling Shutter System

EXPERT SHUTTER SERVICES INC.
668 S.W. WHITMORE DRIVE
PORT ST. LUCIE, FL. 34984
PHONE: (800) 749-9056 , FAX: (772) 871-0990

REV. No	DESCRIPTION	DATE	REV. No	DESCRIPTION	DATE
1	OLD 17-244	06/8/2020	4		
2			5		

DRAWN BY: M.P.
06/8/2020 DATE
20-064 DRAWING No
SHEET 21 OF 26

TABLE 1

MAX. ALLOWABLE STORM BAR SPAN (ft) FOR A GIVEN A.S.D. DESIGN LOAD (p.s.f.), & A GIVEN STORM BAR SPACING (ft) **

MAXIMUM A.S.D. DESIGN PRESSURE RATING (psf)	STORM BAR SPACING (FT)									
	2'	2.667'	3'	3.5'	4'	4.5'	5'	5.5'	6'	6.667'
30.0	11'–0"	11'–0"	11'–0"	11'–0"	11'–0"	11'–0"	11'–0"	11'–0"	11'–0"	11'–0"
35.0	11'–0"	11'–0"	11'–0"	11'–0"	11'–0"	11'–0"	11'–0"	11'–0"	11'–0"	11'–0"
40.0	11'–0"	11'–0"	11'–0"	11'–0"	11'–0"	11'–0"	11'–0"	11'–0"	11'–0"	11'–0"
45.0	11'–0"	11'–0"	11'–0"	11'–0"	11'–0"	11'–0"	11'–0"	11'–0"	11'–0"	11'–0"
50.0	11'–0"	11'–0"	11'–0"	11'–0"	11'–0"	11'–0"	11'–0"	11'–0"	11'–0"	**11'–0" ***
55.0	11'–0"	11'–0"	11'–0"	11'–0"	11'–0"	11'–0"	11'–0"	11'–0"	11'–0"	**11'–0" ***
60.0	11'–0"	11'–0"	11'–0"	11'–0"	11'–0"	11'–0"	11'–0"	11'–0"	**11'–0" ***	–
65.0	11'–0"	11'–0"	11'–0"	11'–0"	11'–0"	11'–0"	11'–0"	11'–0"	**11'–0" ***	–
70.0	11'–0"	11'–0"	11'–0"	11'–0"	11'–0"	11'–0"	11'–0"	**11'–0" ***	**11'–0" ***	–
75.0	11'–0"	11'–0"	11'–0"	11'–0"	11'–0"	11'–0"	11'–0"	**11'–0" ***	–	–
80.0	11'–0"	11'–0"	11'–0"	11'–0"	11'–0"	11'–0"	11'–0"	**10'–10" ***	–	–
85.0	11'–0"	11'–0"	11'–0"	11'–0"	11'–0"	11'–0"	**11'–0" ***	–	–	–
90.0	11'–0"	11'–0"	11'–0"	11'–0"	11'–0"	11'–0"	–	–	–	–
95.0	11'–0"	11'–0"	11'–0"	11'–0"	11'–0"	11'–0"	–	–	–	–
100.0	11'–0"	11'–0"	11'–0"	11'–0"	11'–0"	–	–	–	–	–
105.0	11'–0"	11'–0"	11'–0"	11'–0"	11'–0"	–	–	–	–	–
110.0	11'–0"	11'–0"	11'–0"	11'–0"	10'–10"	–	–	–	–	–
115.0	11'–0"	11'–0"	11'–0"	11'–0"	–	–	–	–	–	–
120.0	11'–0"	11'–0"	11'–0"	11'–0"	–	–	–	–	–	–
125.0	11'–0"	11'–0"	11'–0"	10'–10"	–	–	–	–	–	–
130.0	11'–0"	11'–0"	11'–0"	–	–	–	–	–	–	–
135.0	11'–0"	11'–0"	11'–0"	–	–	–	–	–	–	–
140.0	11'–0"	11'–0"	11'–0"	–	–	–	–	–	–	–
145.0	11'–0"	11'–0"	10'–11"	–	–	–	–	–	–	–
150.0	11'–0"	11'–0"	–	–	–	–	–	–	–	–
155.0	11'–0"	11'–0"	–	–	–	–	–	–	–	–
160.0	11'–0"	11'–0"	–	–	–	–	–	–	–	–

THIS REGION IS ONLY VALID FOR INSTALLATIONS W/ 1 OR MORE STORM BARS PER SHUTTER.

*THIS REGION IS ONLY VALID FOR INSTALLATIONS W/ 2 OR MORE STORM BARS PER SHUTTER.

** MEASURED IN BETWEEN CENTER LINES OF STORM BARS IN FEET OR FROM TIP OF SIDE RAIL TO CENTER OF STORM BAR.

WALTER A. TILLIT JR. LICENSE No. 44167 STATE OF FLORIDA PROFESSIONAL ENGINEER

6/11/2020

P.E. SEAL/SIGNATURE/DATE

© 2020 TILTECO INC.

TILTECO INC.
TILLIT TESTING & ENGINEERING COMPANY
6355 N.W. 36th. St., Ste. 305, VIRGINIA GARDENS, Fl. 33166
Phone : (305)871–1530 . Fax : (305)871–1531
e–mail: tilteco@aol.com
CA–0006719
WALTER A. TILLIT Jr. P.E.
FLORIDA Lic. # 44167

FLORIDA BUILDING CODE (Non High Velocity Hurricane Zone)

Nautilus
Rolling Shutter System

EXPERT SHUTTER SERVICES INC.
668 S.W. WHITMORE DRIVE
PORT ST. LUCIE, FL. 34984
PHONE: (800) 749–9056 , FAX: (772) 871–0990

REV. No	DESCRIPTION	DATE	REV. No	DESCRIPTION	DATE
1	OLD 17–244	06/8/2020	4		
2			5		

DRAWN BY: M.P.

06/8/2020 DATE

20–064 DRAWING No

TABLE 2

REQUIREMENTS FOR STORM BAR CONNECTION TO CONCRETE TOP AND BOTTOM PER SECTION S-S (SHEET 9) FOR A GIVEN A.S.D. DESIGN LOAD (p.s.f.), & STORM BAR SPACING (ft)

MAXIMUM A.S.D. DESIGN PRESSURE RATING (psf)	STORM BAR SPACING "a" (FT)									
	2'	2.667'	3'	3.5'	4'	4.5'	5'	5.5'	6'	6.667'
30.0	A,B,C,D	A,B,C,D	A,B,C,D	A,B,C,D	A,B,C,D	A,B,C,D	A,B,C,D	A,B,C,D	A,B,C,D	A,B,C,D
35.0	A,B,C,D	A,B,C,D	A,B,C,D	A,B,C,D	A,B,C,D	A,B,C,D	A,B,C,D	A,B,C,D	A,B,C,D	A,B,C,D
40.0	A,B,C,D	A,B,C,D	A,B,C,D	A,B,C,D	A,B,C,D	A,B,C,D	A,B,C,D	A,B,C,D	A,B,C,D	A,B,C,D
45.0	A,B,C,D	A,B,C,D	A,B,C,D	A,B,C,D	A,B,C,D	A,B,C,D	A,B,C,D	A,B,C,D	A,B,C,D	A,B,C
50.0	A,B,C,D	A,B,C,D	A,B,C,D	A,B,C,D	A,B,C,D	A,B,C,D	A,B,C,D	A,B,C,D	A,B,C,D	A,B,C
55.0	A,B,C,D	A,B,C,D	A,B,C,D	A,B,C,D	A,B,C,D	A,B,C,D	A,B,C,D	A,B,C,D	A,B,C	A,B,C
60.0	A,B,C,D	A,B,C,D	A,B,C,D	A,B,C,D	A,B,C,D	A,B,C,D	A,B,C,D	A,B,C	A,B,C	A,B,C
65.0	A,B,C,D	A,B,C,D	A,B,C,D	A,B,C,D	A,B,C,D	A,B,C,D	A,B,C	A,B,C	A,B,C	A,B
70.0	A,B,C,D	A,B,C,D	A,B,C,D	A,B,C,D	A,B,C,D	A,B,C	A,B,C	A,B,C	A,B	A
75.0	A,B,C,D	A,B,C,D	A,B,C,D	A,B,C,D	A,B,C,D	A,B,C	A,B,C	A,B	A	A
80.0	A,B,C,D	A,B,C,D	A,B,C,D	A,B,C,D	A,B,C	A,B,C	A,B,C	A	A	A
85.0	A,B,C,D	A,B,C,D	A,B,C,D	A,B,C,D	A,B,C	A,B,C	A,B	A	A	A
90.0	A,B,C,D	A,B,C,D	A,B,C,D	A,B,C	A,B,C	A,B,C	A	A	A	A
95.0	A,B,C,D	A,B,C,D	A,B,C,D	A,B,C	A,B,C	A,B	A	A	A	A
100.0	A,B,C,D	A,B,C,D	A,B,C,D	A,B,C	A,B,C	A	A	A	A	A
105.0	A,B,C,D	A,B,C,D	A,B,C	A,B,C	A,B	A	A	A	A	A
110.0	A,B,C,D	A,B,C,D	A,B,C	A,B,C	A	A	A	A	A	A
115.0	A,B,C,D	A,B,C,D	A,B,C	A,B,C	A	A	A	A	A	A
120.0	A,B,C,D	A,B,C	A,B,C	A,B	A	A	A	A	A	A
125.0	A,B,C,D	A,B,C	A,B,C	A	A	A	A	A	A	A
130.0	A,B,C,D	A,B,C	A,B,C	A	A	A	A	A	A	A
135.0	A,B,C,D	A,B,C	A,B,C	A	A	A	A	A	A	–
140.0	A,B,C,D	A,B,C	A,B	A	A	A	A	A	A	–
145.0	A,B,C,D	A,B,C	A,B	A	A	A	A	A	A	–
150.0	A,B,C,D	A,B,C	A	A	A	A	A	A	–	–
155.0	A,B,C	A,B	A	A	A	A	A	A	–	–
160.0	A,B,C	A,B	A	A	A	A	A	–	–	–

TABLE 3

REQUIREMENTS FOR STORM BAR CONNECTION TO CONCRETE TOP AND BOTTOM PER SECTION S1-S1 (SHEET 9) FOR A GIVEN A.S.D. DESIGN LOAD (p.s.f.), & STORM BAR SPACING (ft)

MAXIMUM A.S.D. DESIGN PRESSURE RATING (psf)	STORM BAR SPACING "a" (FT)									
	2'	2.667'	3'	3.5'	4'	4.5'	5'	5.5'	6'	6.667'
30.0	A,B,C,D	A,B,C,D	A,B,C,D	A,B,C,D	A,B,C,D	A,B,C,D	A,B,C,D	A,B,C	A,B,C	A,B,C
35.0	A,B,C,D	A,B,C,D	A,B,C,D	A,B,C,D	A,B,C,D	A,B,C	A,B,C	A,B,C	A,B	A
40.0	A,B,C,D	A,B,C,D	A,B,C,D	A,B,C,D	A,B,C	A,B,C	A,B,C	A	A	A
45.0	A,B,C,D	A,B,C,D	A,B,C,D	A,B,C	A,B,C	A,B,C	A	A	A	A
50.0	A,B,C,D	A,B,C,D	A,B,C,D	A,B,C	A,B,C	A	A	A	A	A
55.0	A,B,C,D	A,B,C,D	A,B,C	A,B,C	A	A	A	A	A	A
60.0	A,B,C,D	A,B,C	A,B,C	A,B	A	A	A	A	A	A
65.0	A,B,C,D	A,B,C	A,B,C	A	A	A	A	A	A	A
70.0	A,B,C,D	A,B,C	A,B	A	A	A	A	A	A	–
75.0	A,B,C,D	A,B,C	A	A	A	A	A	A	–	–
80.0	A,B,C	A,B	A	A	A	A	A	–	–	–
85.0	A,B,C	A	A	A	A	A	A	–	–	–
90.0	A,B,C	A	A	A	A	A	–	–	–	–
95.0	A,B,C	A	A	A	A	A	–	–	–	–
100.0	A,B,C	A	A	A	A	–	–	–	–	–
105.0	A,B	A	A	A	A	–	–	–	–	–
110.0	A	A	A	A	–	–	–	–	–	–
115.0	A	A	A	A	–	–	–	–	–	–
120.0	A	A	A	A	–	–	–	–	–	–
125.0	A	A	A	–	–	–	–	–	–	–
130.0	A	A	A	–	–	–	–	–	–	–
135.0	A	A	A	–	–	–	–	–	–	–
140.0	A	A	A	–	–	–	–	–	–	–
145.0	A	A	A	–	–	–	–	–	–	–
150.0	A	A	–	–	–	–	–	–	–	–
155.0	A	A	–	–	–	–	–	–	–	–
160.0	A	A	–	–	–	–	–	–	–	–

ANCHORS TYPE LEGEND

A 3/8"ø CARBON STEEL KWIK BOLT TZ EXPANSION ANCHOR W/ 2 1/2" Min. EMBEDMENT* & 5" Min. THICK POURED CONCRETE (f'c = 3000 psi)

B 3/8"øx1 1/4" POWERS CALK-IN ANCHORS W/ 1 1/4" Min. EMBEDMENT* TO POURED CONCRETE (f'c = 3000 psi) & 3/8"ø-16 MACHINE SCREWS

C 1/4"øx3/4" ALL POINTS SOLID-SET ANCHORS W/ 7/8" Min. EMBEDMENT* TO POURED CONCRETE (f'c = 3000 psi) & 1/4"ø-20, 18-8 STAINLESS STEEL MACHINE SCREWS

D 5/16"ø ITW/BUILDEX TAPCON ANCHORS W/ 2 1/4" Min. EMBEDMENT* TO POURED CONCRETE (f'c = 2899 psi)

* EMBEDMENT IS BEYOND ANY FLOOR / CEILING FINISH

WALTER A. TILLIT JR. LICENSE No. 44167 STATE OF FLORIDA PROFESSIONAL ENGINEER

6/11/2020

P.E. SEAL/SIGNATURE/DATE

FLORIDA BUILDING CODE (Non High Velocity Hurricane Zone)

© 2020 TILTECO INC.

TILTECO INC.
TILLIT TESTING & ENGINEERING COMPANY
6355 N.W. 36th. St., Ste. 305, VIRGINIA GARDENS, FL. 33166
Phone : (305)871-1530 . Fax : (305)871-1531
e-mail: tilteco@aol.com
CA-0006719
WALTER A. TILLIT Jr. P.E.
FLORIDA Lic. # 44167

Nautilus
Rolling Shutter System

EXPERT SHUTTER SERVICES INC.
668 S.W. WHITMORE DRIVE
PORT ST. LUCIE, FL. 34984
PHONE: (800) 749-9056 , FAX: (772) 871-0990

REV. No	DESCRIPTION	DATE	REV. No	DESCRIPTION	DATE
1	OLD 17-244	06/8/2020	4		
2			5		

DRAWN BY: M.P.

06/8/2020
DATE

20-064
DRAWING No

SHEET 23 OF 26

SCHEDULE 1a
FLOOR TO CEILING (TRAPPED) MOUNTING
MAX. SPAN (ft) FOR END AND INTERIOR MULLIONS FOR A GIVEN A.S.D. DESIGN PRESSURE RATING (p.s.f.), & A MAX. MULLION SPACING (ft) *

MAX. A.S.D. DESIGN PRESSURE RATING (p.s.f.)	MAXIMUM MULLION SPACING (ft) *	MAXIMUM MULLION SPAN (FT)										
		(G) 4"x6"x1/4" MULLION				(G1) 4"x8"x1/4" MULLION				(G2) 4"x7"x1/4" THICK (3/8" FLANGE) MULLION		
		ORIENTATION #1 (⬌)†		ORIENTATION #2 (▯)†		ORIENTATION #1 (⬌)†		ORIENTATION #2 (▯)		ORIENTATION #1 (⬌)†	ORIENTATION #2 (▯)†	
		END	INTERIOR	END	INTERIOR	END	INTERIOR	END	INTERIOR	END	END	INTERIOR
30.0	20'-0"	7'-10"	9'-8"	7'-3"	12'-0"	9'-4"	10'-7"	8'-0"	12'-6"	9'-8"	7'-6"	12'-6"
35.0	20'-0"	7'-4"	9'-3"	6'-9"	11'-5"	8'-8"	10'-0"	7'-7"	12'-6"	8'-11"	6'-11"	12'-6"
40.0	20'-0"	6'-10"	8'-10"	6'-4"	10'-11"	8'-1"	9'-7"	7'-3"	12'-6"	8'-5"	6'-6"	12'-6"
45.0	20'-0"	6'-6"	8'-6"	6'-6"	10'-6"	7'-8"	9'-3"	6'-11"	12'-6"	7'-11"	6'-2"	12'-6"
50.0	20'-0"	6'-2"	8'-2"	6'-0"	9'-11"	7'-4"	8'-11"	6'-7"	12'-6"	7'-4"	5'-11"	12'-6"
55.0	20'-0"	5'-11"	7'-11"	5'-9"	9'-0"	6'-8"	8'-7"	6'-3"	12'-4"	6'-8"	5'-7"	12'-6"
60.0	19'-5"	5'-9"	7'-9"	5'-6"	8'-6"	6'-4"	8'-6"	6'-2"	12'-0"	6'-4"	5'-6"	12'-6"
65.0	18'-4"	5'-9	7'-9"	5'-4"	8'-4"	6'-4"	8'-4"	6'-2	11'-10"	6'-4"	5'-6	12'-6"
70.0	17'-4"	5'-9"	7'-8"	5'-4"	8'-2"	6'-3"	8'-2"	6'-2"	11'-9"	6'-3"	5'-6	12'-6"
75.0	16'-6"	5'-9"	7'-7"	5'-4"	8'-0"	6'-3"	8'-0"	6'-2"	11'-7"	6'-3"	5'-6	12'-5"
80.0	15'-9"	5'-9"	7'-7"	5'-4"	7'-10"	6'-3"	7'-10"	6'-2"	11'-6"	6'-3"	5'-6	12'-4"
85.0	15'-0"	5'-9"	7'-7"	5'-4"	7'-9"	6'-3"	7'-9"	6'-2"	11'-5"	6'-3"	5'-6	12'-3
90.0	14'-2"	5'-10"	7'-7"	5'-5"	7'-9"	6'-4"	7'-9"	6'-3"	11'-5"	6'-4"	5'-7	12'-3
95.0	13'-5"	5'-10"	7'-7"	5'-6"	7'-9"	6'-5"	7'-9"	6'-4"	11'-5"	6'-5"	5'-8	12'-3
100.0	12'-9"	5'-11"	7'-7"	5'-7"	7'-9"	6'-6"	7'-9"	6'-4"	11'-5"	6'-6"	5'-9	12'-3
105.0	12'-2"	6'-0"	7'-7"	5'-7"	7'-9"	6'-7"	7'-9"	6'-5"	11'-5"	6'-7"	5'-9	12'-3
110.0	11'-7"	6'-0"	7'-7"	5'-8"	7'-9"	6'-8"	7'-9"	6'-6"	11'-5"	6'-8"	5'-10"	12'-3
115.0	11'-1"	6'-1"	7'-7"	5'-9"	7'-9"	6'-9"	7'-9"	6'-7"	11'-5"	6'-9"	5'-11"	12'-3
120.0	10'-8"	6'-1"	7'-6"	5'-9"	7'-9"	6'-10"	7'-9"	6'-7"	11'-5"	6'-10"	6'-0"	12'-3
125.0	10'-2"	6'-2"	7'-7"	5'-10"	7'-10"	7'-0"	7'-10"	6'-9"	11'-5"	7'-0"	6'-1"	12'-3
130.0	9'-10"	6'-3"	7'-7"	5'-10"	7'-9"	7'-0"	7'-9"	6'-9"	11'-5"	7'-0"	6'-1"	12'-3
135.0	9'-5"	6'-4"	7'-7"	5'-11"	7'-10"	7'-2"	7'-10"	6'-10"	11'-5"	7'-2"	6'-2"	12'-3
140.0	9'-1"	6'-4"	7'-7"	6'-0"	7'-10"	7'-3"	7'-10"	6'-11"	11'-5"	7'-3"	6'-3"	12'-3
145.0	8'-10"	6'-5"	7'-6"	6'-0"	7'-9"	7'-4"	7'-9"	6'-11"	11'-5"	7'-4"	6'-3"	12'-3
150.0	8'-6"	6'-6"	7'-7"	6'-1"	7'-9"	7'-5"	7'-9"	7'-0"	11'-5"	7'-5"	6'-4"	12'-3
155.0	8'-3"	6'-6"	7'-7"	6'-2"	7'-9"	7'-6"	7'-9"	7'-1"	11'-5"	7'-6"	6'-5"	12'-3
160.0	8'-0"	6'-7"	7'-6"	6'-2"	7'-9"	7'-7"	7'-9"	7'-2"	11'-5"	7'-7"	6'-6"	12'-3

SCHEDULE 2a
WALL MOUNTING
MAX. SPAN (FT) FOR END AND INTERIOR MULLIONS FOR A GIVEN A.S.D. DESIGN PRESSURE RATING (P.S.F.), & A MAX. MULLION SPACING (FT) *

MAX. A.S.D. DESIGN PRESSURE RATING (p.s.f.)	MAXIMUM MULLION SPACING (ft) *	MAXIMUM MULLION SPAN (FT)									
		(G) 4"x6"x1/4" MULLION				(G1) 4"x8"x1/4" MULLION				(G2) 4"x7"x1/4" THICK (3/8" FLANGE) MULLION	
		ORIENTATION #1 (⬌)†		ORIENTATION #2 (▯)†		ORIENTATION #1 (⬌)†		ORIENTATION #2 (▯)†		ORIENTATION #2 (▯)†	
		END	INTERIOR	END	INTERIOR	END	INTERIOR	END	INTERIOR	END	INTERIOR
30.0	20'-0"	7'-10"	9'-8"	7'-3"	12'-0"	9'-4"	10'-7"	8'-0"	12'-6"	7'-6"	12'-6"
35.0	20'-0"	7'-4"	9'-3"	6'-9"	11'-5"	8'-8"	10'-0"	7'-7"	12'-6"	6'-11"	12'-6"
40.0	20'-0"	6'-10"	8'-10"	6'-4"	10'-11"	8'-1"	9'-7"	7'-3"	12'-6"	6'-6"	12'-6"
45.0	20'-0"	6'-6"	8'-6"	6'-6"	10'-6"	7'-8"	9'-3"	6'-11"	12'-6"	6'-2"	12'-6"
50.0	20'-0"	6'-2"	8'-2"	6'-0"	10'-2"	7'-4"	8'-11"	5'-3"	12'-6"	5'-11"	12'-6"
55.0	20'-0"	5'-11"	7'-11"	5'-9"	9'-10"	7'-0"	8'-7"	4'-10"	12'-4"	5'-7"	12'-6"
60.0	19'-5"	5'-9"	7'-9"	5'-6"	9'-8"	6'-10"	8'-6"	4'-8"	12'-0"	5'-6"	12'-6"
65.0	18'-4"	5'-9	7'-9"	5'-4"	9'-7"	6'-10"	8'-5"	4'-8"	11'-10"	5'-6	12'-6"
70.0	17'-4"	5'-9"	7'-8"	5'-4"	9'-6"	6'-10"	8'-4"	4'-8"	11'-9"	5'-6	12'-6"
75.0	16'-6"	5'-9"	7'-7"	5'-4"	9'-5"	6'-10"	8'-3"	4'-8"	11'-7"	5'-6	12'-5"
80.0	15'-9"	5'-9"	7'-7"	5'-4"	9'-4"	6'-10"	8'-3"	4'-8"	11'-6"	5'-6	12'-4"
85.0	15'-0"	5'-9"	7'-7"	5'-4"	9'-3"	6'-10"	8'-2"	4'-8"	11'-5"	5'-6	12'-3
90.0	14'-2"	5'-10"	7'-7"	5'-5"	9'-3"	6'-11"	8'-3"	4'-10"	11'-5"	5'-7	12'-3
95.0	13'-5"	5'-10"	7'-7"	5'-6"	9'-3"	6'-11"	8'-3"	4'-11"	11'-5"	5'-8	12'-3
100.0	12'-9"	5'-11"	7'-7"	5'-7"	9'-3"	7'-0"	8'-2"	5'-0"	11'-5"	5'-9	12'-3
105.0	12'-2"	6'-0"	7'-7"	5'-7"	9'-3"	7'-1"	8'-2"	5'-1"	11'-5"	5'-9	12'-3
110.0	11'-7"	6'-0"	7'-7"	5'-8"	9'-3"	7'-2"	8'-3"	5'-3"	11'-5"	5'-10"	12'-3
115.0	11'-1"	6'-1"	7'-7"	5'-9"	9'-3"	7'-2"	8'-3"	5'-4"	11'-5"	5'-11"	12'-3
120.0	10'-8"	6'-1"	7'-6"	5'-9"	9'-3"	7'-3"	8'-2"	5'-5"	11'-5"	6'-0"	12'-3
125.0	10'-2"	6'-2"	7'-7"	5'-10"	9'-3"	7'-4"	8'-3"	6'-9"	11'-5"	6'-1"	12'-3
130.0	9'-10"	6'-3"	7'-7"	5'-10"	9'-3"	7'-4"	8'-2"	6'-9"	11'-5"	6'-1"	12'-3
135.0	9'-5"	6'-4"	7'-7"	5'-11"	9'-3"	7'-5"	8'-3"	6'-10"	11'-5"	6'-2"	12'-3
140.0	9'-1"	6'-4"	7'-7"	6'-0"	9'-3"	7'-6"	8'-3"	6'-11"	11'-5"	6'-3"	12'-3
145.0	8'-10"	6'-5"	7'-6"	6'-0"	9'-3"	7'-6"	8'-2"	6'-11"	11'-5"	6'-3"	12'-3
150.0	8'-6"	6'-6"	7'-7"	6'-1"	9'-3"	7'-7"	8'-2"	7'-0"	11'-5"	6'-4"	12'-3
155.0	8'-3"	6'-6"	7'-7"	6'-2"	9'-3"	7'-8"	8'-2"	7'-1"	11'-5"	6'-5"	12'-3
160.0	8'-0"	6'-7"	7'-6"	6'-2"	9'-3"	7'-9"	8'-2"	7'-2"	11'-5"	6'-6"	12'-3

* MAXIMUM MULLION SPACING SHALL BE SUCH THAT MAX. ALLOWABLE SLAT SPAN FOR THAT A.S.D. DESIGN PRESSURE RATING SHALL NOT BE EXCEEDED.

† MULLION ORIENTATION IS AS SEEN FROM THE OUTSIDE (EXTERIOR) OF PRODUCT.

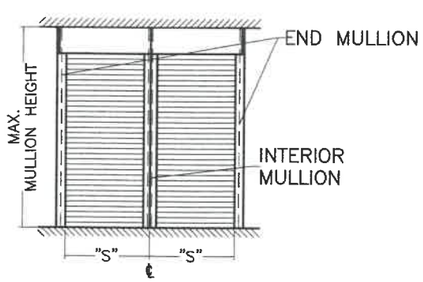

MULLION SPACING: "S"

WALTER A. TILLIT JR. LICENSE No. 44167 STATE OF FLORIDA PROFESSIONAL ENGINEER

6/11/2020

P.E. SEAL/SIGNATURE/DATE

© 2020 TILTECO INC.

TILTECO INC.
TILLIT TESTING & ENGINEERING COMPANY
6355 N.W. 36th. St., Ste. 305, VIRGINIA GARDENS, FL 33166
Phone : (305)871-1530 . Fax : (305)871-1531
e-mail: tilteco@aol.com
CA-0006719
WALTER A. TILLIT Jr. P.E.
FLORIDA Lic. # 44167

FLORIDA BUILDING CODE (Non High Velocity Hurricane Zone)

Nautilus
Rolling Shutter System

EXPERT SHUTTER SERVICES INC.
668 S.W. WHITMORE DRIVE
PORT ST. LUCIE, FL. 34984
PHONE: (800) 749-9056 , FAX: (772) 871-0990

REV. No	DESCRIPTION	DATE	REV. No	DESCRIPTION	DATE
1	OLD 17-244	06/8/2020	4		
2			5		

DRAWN BY: M.P.

06/8/2020 DATE

20-064 DRAWING No

SHEET 24 OF 26

SCHEDULE 1b

FLOOR TO CEILING (TRAPPED) MOUNTING MAX. SPAN (ft) FOR END AND INTERIOR MULLIONS FOR A GIVEN A.S.D. DESIGN PRESSURE RATING (p.s.f.), & A 12'-0" MAX. MULLION SPACING (ft) *

MAX. A.S.D. DESIGN PRESSURE RATING (p.s.f.)	MAXIMUM MULLION SPACING (ft) *	MAXIMUM MULLION SPAN (FT)										
		(G) 4"x6"x1/4" MULLION				(G1) 4"x8"x1/4" MULLION				(G2) 4"x7"x1/4" THICK (3/8" FLANGE) MULLION		
		ORIENTATION #1 (⬌)†		ORIENTATION #2 ([])†		ORIENTATION #1 (⬌)†		ORIENTATION #2 ([])†		ORIENTATION #1 (⬌)†	ORIENTATION #2 ([])†	
		END	INTERIOR	END	INTERIOR	END	INTERIOR	END	INTERIOR	END	END	INTERIOR
30.0	12'-0"	11'-7"	11'-6"	9'-9"	12'-6"	12'-6"	12'-6"	10'-7"	12'-6"	12'-6"	11'-3"	12'-6"
35.0	12'-0"	10'-7"	10'-11"	9'-2"	12'-6"	12'-6"	11'-11"	10'-0"	12'-6"	12'-6"	10'-4"	12'-6"
40.0	12'-0"	9'-10"	10'-5"	8'-9"	12'-6"	11'-8"	11'-4"	9'-6"	12'-6"	11'-10"	9'-7"	12'-6"
45.0	12'-0"	9'-3"	10'-1"	8'-4"	12'-5"	10'-11"	10'-11"	9'-1"	12'-6"	11'-2"	9'-0"	12'-6"
50.0	12'-0"	8'-9"	9'-8"	8'-1"	12'-0"	10'-4"	10'-7"	8'-9"	12'-6"	10'-7"	8'-6"	12'-6"
55.0	12'-0"	8'-4"	9'-5"	7'-10"	11'-8"	9'-10"	10'-3"	8'-6"	12'-6"	10'-1"	8'-1"	12'-6"
60.0	12'-0"	8'-0"	9'-2"	7'-6"	11'-4"	9'-5"	9'-11"	8'-3"	12'-6"	9'-7"	7'-9"	12'-6"
65.0	12'-0"	7'-8"	8'-11"	7'-2"	11'-0"	9'-1"	9'-8"	8'-0"	12'-6"	9'-3"	7'-5"	12'-6"
70.0	12'-0"	7'-4"	8'-8"	6'-11"	10'-9"	8'-9"	9'-5"	7'-10"	12'-6"	8'-11"	7'-2"	12'-6"
75.0	12'-0"	7'-1"	8'-6"	6'-8"	10'-6"	8'-5"	9'-3"	7'-8"	12'-6"	8'-7"	6'-11"	12'-6"
80.0	12'-0"	6'-11"	8'-4"	6'-5"	10'-3"	8'-2"	9'-0"	7'-5"	12'-6"	8'-4"	6'-8"	12'-6"
85.0	12'-0"	6'-8"	8'-2"	6'-3"	9'-9"	7'-11"	8'-10"	7'-2"	12'-6"	8'-1"	6'-6"	12'-6"
90.0	12'-0"	6'-6"	8'-0"	6'-1"	9'-2"	7'-8"	8'-8"	7'-0"	12'-5"	7'-10"	6'-4"	12'-6"
95.0	12'-0"	6'-4"	7'-10"	5'-11"	8'-8"	7'-5"	8'-6"	6'-10"	12'-1"	7'-5"	6'-2"	12'-6"
100.0	12'-0"	6'-2"	7'-8"	5'-9"	8'-3"	7'-0"	8'-3"	6'-8"	11'-9"	7'-0"	6'-0"	12'-6"
105.0	12'-0"	6'-0"	7'-7"	5'-8"	7'-10"	6'-8"	7'-10"	6'-6"	11'-6"	6'-8"	5'-10"	12'-4"

SCHEDULE 2b

WALL MOUNTING MAX. SPAN (FT) FOR END AND INTERIOR MULLIONS FOR A GIVEN A.S.D. DESIGN PRESSURE RATING (P.S.F.), & A 12'-0" MAX. MULLION SPACING (FT) *

MAX. A.S.D. DESIGN PRESSURE RATING (p.s.f.)	MAXIMUM MULLION SPACING (ft) *	MAXIMUM MULLION SPAN (FT)									
		(G) 4"x6"x1/4" MULLION				(G1) 4"x8"x1/4" MULLION				(G2) 4"x7"x1/4" THICK (3/8" FLANGE) MULLION	
		ORIENTATION #1 (⬌)†		ORIENTATION #2 ([])†		ORIENTATION #1 (⬌)†		ORIENTATION #2 ([])†		ORIENTATION #2 ([])†	
		END	INTERIOR	END	INTERIOR	END	INTERIOR	END	INTERIOR	END	INTERIOR
30.0	12'-0"	9'-9"	11'-6"	9'-9"	12'-6"	12'-6"	12'-6"	10'-7"	12'-6"	11'-3"	12'-6"
35.0	12'-0"	9'-2"	10'-11"	9'-2"	12'-6"	12'-6"	11'-11"	10'-0"	12'-6"	10'-4"	12'-6"
40.0	12'-0"	8'-9"	10'-5"	8'-9"	12'-6"	11'-8"	11'-4"	9'-6"	12'-6"	9'-7"	12'-6"
45.0	12'-0"	8'-4"	10'-1"	8'-4"	12'-5"	10'-11"	10'-11"	9'-1"	12'-6"	9'-0"	12'-6"
50.0	12'-0"	8'-1"	9'-8"	8'-1"	12'-0"	10'-4"	10'-7"	8'-9"	12'-6"	8'-6"	12'-6"
55.0	12'-0"	7'-10"	9'-5"	7'-10"	11'-8"	9'-10"	10'-3"	8'-6"	12'-6"	8'-1"	12'-6"
60.0	12'-0"	7'-6"	9'-2"	7'-6"	11'-4"	9'-5"	9'-11"	8'-3"	12'-6"	7'-9"	12'-6"
65.0	12'-0"	7'-2"	8'-11"	7'-2"	11'-0"	9'-1"	9'-8"	8'-0"	12'-6"	7'-5"	12'-6"
70.0	12'-0"	6'-11"	8'-8"	6'-11"	10'-9"	8'-9"	9'-5"	7'-10"	12'-6"	7'-2"	12'-6"
75.0	12'-0"	6'-8"	8'-6"	6'-8"	10'-6"	8'-5"	9'-3"	7'-8"	12'-6"	6'-11"	12'-6"
80.0	12'-0"	6'-5"	8'-4"	6'-5"	10'-3"	8'-2"	9'-0"	7'-5"	12'-6"	6'-8"	12'-6"
85.0	12'-0"	6'-3"	8'-2"	6'-3"	10'-1"	7'-11"	8'-10"	7'-2"	12'-6"	6'-6"	12'-6"
90.0	12'-0"	6'-1"	8'-0"	6'-1"	9'-11"	7'-8"	8'-8"	7'-0"	12'-5"	6'-4"	12'-6"
95.0	12'-0"	5'-11"	7'-10"	5'-11"	9'-8"	7'-6"	8'-6"	6'-10"	12'-1"	6'-2"	12'-6"
100.0	12'-0"	5'-9"	7'-8"	5'-9"	9'-7"	7'-4"	8'-5"	5'-6"	11'-9"	6'-0"	12'-6"
105.0	12'-0"	5'-8"	7'-7"	8'-8"	9'-4"	7'-1"	8'-3"	5'-3"	11'-6"	5'-10"	12'-4"

SCHEDULE 1b' (LIMITED LOAD, MULLION SPACING & SPAN INSTALLATION)

FLOOR TO CEILING (TRAPPED) MOUNTED MAX. SPAN (ft) FOR END & INTERIOR MULLIONS FOR A GIVEN A.S.D. DESIGN PRESSURE (p.s.f.), AND FOR 12'-0" (CASE I) & 8'-0" (CASES Ia & II) MAX. MULLION SPACING (ft) *

INSTALLATION CASES	MAX. A.S.D. DESIGN PRESSURE RATING (p.s.f.)	MAXIMUM MULLION SPACING (ft) *	MAXIMUM MULLION SPAN (FT)						
			(G) 4"x6"x1/4" THICK MULLION		(G1) 4"x8"x1/4" THICK MULLION			(G3) 2"x7"x1/4" THICK (3/8" FLANGE) MULLION	
			ORIENTATION #1 (⬌)†	ORIENTATION #2 ([])†	ORIENTATION #1 (⬌)†	ORIENTATION #1 (⬌)†	ORIENTATION #2 ([])†	ORIENTATION #1 (⬌)†	ORIENTATION #2 ([])†
			END	INTERIOR	END	INTERIOR	INTERIOR	END	INTERIOR
CASE I	30.0	12'-0"	–	12'-6"	12'-6"	12'-6"	12'-6"	–	11'-0"
	35.0	12'-0"	–	12'-6"	12'-6"	11'-11"	12'-6"	–	11'-0"
	40.0	12'-0"	–	12'-6"	11'-8"	11'-4"	12'-6"	–	11'-0"
	45.0	12'-0"	–	12'-5"	10'-11"	10'-11"	12'-6"	–	11'-0"
	50.0	12'-0"	–	12'-0"	10'-4"	10'-7"	12'-6"	–	11'-0"
	55.0	12'-0"	–	11'-8"	9'-10"	10'-3"	12'-6"	–	11'-0"
	60.0	12'-0"	–	11'-4"	9'-5"	9'-11"	12'-6"	–	11'-0"
	60.8	12'-0"	–	11'-3"	9'-4"	9'-11"	12'-6"	–	11'-0"
CASE Ia	30.0	8'-0"	–	12'-6"	12'-6"	12'-6"	12'-6"	–	11'-0"
	35.0	8'-0"	–	12'-6"	12'-6"	12'-6"	12'-6"	–	11'-0"
	40.0	8'-0"	–	12'-6"	12'-6"	12'-6"	12'-6"	–	11'-0"
	45.0	8'-0"	–	12'-6"	12'-6"	12'-6"	12'-6"	–	11'-0"
	50.0	8'-0"	–	12'-6"	12'-6"	12'-1"	12'-6"	–	11'-0"
	55.0	8'-0"	–	12'-6"	12'-6"	11'-8"	12'-6"	–	11'-0"
	60.0	8'-0"	–	12'-2"	12'-2"	11'-4"	12'-2"	–	11'-0"
	60.8	8'-0"	–	12'-0"	12'-0"	11'-4"	12'-0"	–	11'-0"
CASE II	30.0	8'-0"	–	9'-0"	9'-0"	9'-0"	9'-0"	–	9'-0"
	35.0	8'-0"	–	9'-0"	9'-0"	9'-0"	9'-0"	–	9'-0"
	40.0	8'-0"	–	9'-0"	9'-0"	9'-0"	9'-0"	–	9'-0"
	45.0	8'-0"	–	9'-0"	9'-0"	9'-0"	9'-0"	–	9'-0"
	50.0	8'-0"	–	9'-0"	9'-0"	9'-0"	9'-0"	–	9'-0"
	55.0	8'-0"	–	9'-0"	9'-0"	9'-0"	9'-0"	–	9'-0"
	60.0	8'-0"	–	9'-0"	9'-0"	9'-0"	9'-0"	–	9'-0"
	65.0	8'-0"	–	9'-0"	9'-0"	9'-0"	9'-0"	–	9'-0"
	70.0	8'-0"	–	9'-0"	9'-0"	9'-0"	9'-0"	–	9'-0"
	75.0	8'-0"	–	9'-0"	9'-0"	9'-0"	9'-0"	–	9'-0"
	80.0	8'-0"	–	9'-0"	9'-0"	8'-9" *	9'-0"	–	9'-0"
	85.0	8'-0"	–	9'-0"	8'-9" *	8'-3" *	9'-0"	–	9'-0"
	90.0	8'-0"	–	9'-0"	8'-2" *	7'-9" *	9'-0"	–	9'-0"
	95.0	8'-0"	–	9'-0"	7'-8" *	7'-4" *	9'-0"	–	9'-0"
	100.0	8'-0"	–	9'-0"	7'-3" *	7'-0" *	9'-0"	–	9'-0"

* NOTE: USE 9'-0" IF ANCHOR CONSISTS OF HILTI, INC HUS-H SCREW OR POWER FASTENERS, WEDGE-BOLT ANCHOR. SEE SCHEDULES 1 & 2 ON SHEET 10A.

SCHEDULE 2b' (LIMITED LOAD, MULLION SPACING & SPAN INSTALLATION)

WALL MOUNTED MAX. SPAN (ft) FOR END & INTERIOR MULLIONS FOR A GIVEN A.S.D. DESIGN PRESSURE RATING (p.s.f.), AND FOR 12'-0" (CASE I) & 8'-0" (CASE II) MAX. MULLION SPACING (ft) *

INSTALLATION CASES	MAX. A.S.D. DESIGN PRESSURE RATING (p.s.f.)	MAXIMUM MULLION SPACING (ft) *	MAXIMUM MULLION SPAN (FT)						
			(G) 4"x6"x1/4" THICK MULLION		(G1) 4"x8"x1/4" THICK MULLION			(G3) 2"x7"x1/4" THICK (3/8" FLANGE) MULLION	
			ORIENTATION #1 (⬌)†	ORIENTATION #2 ([])†	ORIENTATION #1 (⬌)†	ORIENTATION #1 (⬌)†	ORIENTATION #2 ([])†	ORIENTATION #1 (⬌)†	ORIENTATION #2 ([])†
			END	INTERIOR	END	INTERIOR	INTERIOR	END	INTERIOR
CASE I'	30.0	12'-0"	–	12'-6"	12'-6"	12'-6"	12'-6"	–	11'-0"
	35.0	12'-0"	–	12'-6"	12'-6"	11'-11"	12'-6"	–	11'-0"
	40.0	12'-0"	–	12'-6"	11'-8"	11'-4"	12'-6"	–	11'-0"
	45.0	12'-0"	–	12'-5"	10'-11"	10'-11"	12'-6"	–	11'-0"
	50.0	12'-0"	–	12'-0"	10'-4"	10'-7"	12'-6"	–	11'-0"
	55.0	12'-0"	–	11'-8"	9'-10"	10'-3"	12'-6"	–	11'-0"
	60.0	12'-0"	–	11'-4"	9'-5"	9'-11"	12'-6"	–	11'-0"
	60.8	12'-0"	–	11'-3"	9'-4"	9'-11"	12'-6"	–	11'-0"
CASE II'	30.0	8'-0"	–	9'-0"	9'-0"	9'-0"	9'-0"	–	9'-0"
	35.0	8'-0"	–	9'-0"	9'-0"	9'-0"	9'-0"	–	9'-0"
	40.0	8'-0"	–	9'-0"	9'-0"	9'-0"	9'-0"	–	9'-0"
	45.0	8'-0"	–	9'-0"	9'-0"	9'-0"	9'-0"	–	9'-0"
	50.0	8'-0"	–	9'-0"	9'-0"	9'-0"	9'-0"	–	9'-0"
	55.0	8'-0"	–	9'-0"	9'-0"	9'-0"	9'-0"	–	9'-0"
	60.0	8'-0"	–	9'-0"	9'-0"	9'-0"	9'-0"	–	9'-0"
	65.0	8'-0"	–	9'-0"	9'-0"	9'-0"	9'-0"	–	9'-0"
	70.0	8'-0"	–	9'-0"	9'-0"	9'-0"	9'-0"	–	9'-0"
	75.0	8'-0"	–	9'-0"	9'-0"	9'-0"	9'-0"	–	9'-0"
	80.0	8'-0"	–	9'-0"	9'-0"	9'-0"	9'-0"	–	9'-0"
	85.0	8'-0"	–	9'-0"	9'-0"	9'-0"	9'-0"	–	9'-0"
	90.0	8'-0"	–	9'-0"	9'-0"	9'-0"	9'-0"	–	9'-0"
	95.0	8'-0"	–	9'-0"	9'-0"	9'-0"	9'-0"	–	9'-0"
	100.0	8'-0"	–	9'-0"	9'-0"	9'-0"	9'-0"	–	9'-0"

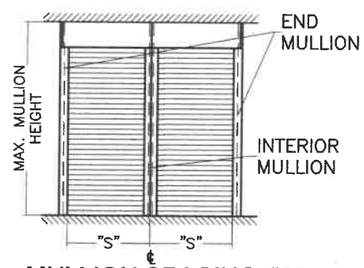

MULLION SPACING: "S"

* MAXIMUM MULLION SPACING SHALL BE SUCH THAT MAX. ALLOWABLE SLAT SPAN FOR THAT DESIGN LOAD SHALL NOT BE EXCEEDED.

† MULLION ORIENTATION IS AS SEEN FROM THE OUTSIDE (EXTERIOR) OF PRODUCT.

WALTER A. TILLIT JR. LICENSE No. 44167 STATE OF FLORIDA PROFESSIONAL ENGINEER

9/11/2020

P.E. SEAL/SIGNATURE/DATE

© 2020 TILTECO INC.

TILTECO INC.
TILLIT TESTING & ENGINEERING COMPANY
6355 N.W. 36th. St., Ste. 305, VIRGINIA GARDENS, FL 33166
Phone : (305)871-1530 . Fax : (305)871-1531
e-mail: tilteco@aol.com
CA-0006719
WALTER A. TILLIT Jr. P.E.
FLORIDA Lic. # 44167

FLORIDA BUILDING CODE (Non High Velocity Hurricane Zone)

Nautilus
Rolling Shutter System

EXPERT SHUTTER SERVICES INC.
668 S.W. WHITMORE DRIVE
PORT ST. LUCIE, FL. 34984
PHONE: (800) 749-9056 , FAX: (772) 871-0990

REV. No	DESCRIPTION	DATE	REV. No	DESCRIPTION	DATE
1	OLD 17-244	06/8/2020	4		
2			5		

DRAWN BY: M.P.

06/8/2020 DATE

20-064 DRAWING No

SCHEDULE 1c
FLOOR TO CEILING (TRAPPED) MOUNTING
MAX. SPAN (ft) FOR END AND INTERIOR MULLIONS FOR A GIVEN A.S.D. DESIGN PRESSURE RATING (p.s.f.), & A 7'-0" MAX. MULLION SPACING (ft) *

MAX. A.S.D. DESIGN PRESSURE RATING (p.s.f.)	MAXIMUM MULLION SPACING (ft) *	MAXIMUM MULLION SPAN (FT)										
		(G) 4"x6"x1/4" MULLION				(G1) 4"x8"x1/4" MULLION				(G2) 4"x7"x1/4" THICK (3/8" FLANGE) MULLION		
		ORIENTATION #1 (⟺)†		ORIENTATION #2 ([])†		ORIENTATION #1 (⟺)†		ORIENTATION #2 ([])†		ORIENTATION #1 (⟺)†	ORIENTATION #2 ([])†	
		END	INTERIOR	END	INTERIOR	END	INTERIOR	END	INTERIOR	END	END	INTERIOR
30.0	7'-0"	12'-6"	12'-6"	12'-6"	12'-6"	12'-6"	12'-6"	12'-6"	12'-6"	12'-6"	12'-6"	12'-6"
35.0	7'-0"	12'-6"	12'-6"	12'-6"	12'-6"	12'-6"	12'-6"	12'-6"	12'-6"	12'-6"	12'-6"	12'-6"
40.0	7'-0"	12'-6"	12'-6"	12'-6"	12'-6"	12'-6"	12'-6"	12'-6"	12'-6"	12'-6"	12'-6"	12'-6"
45.0	7'-0"	12'-6"	12'-0"	12'-6"	12'-6"	12'-6"	12'-6"	12'-6"	12'-6"	12'-6"	12'-6"	12'-6"
50.0	7'-0"	12'-6"	11'-7"	12'-6"	12'-6"	12'-6"	12'-6"	12'-6"	12'-6"	12'-6"	12'-6"	12'-6"
55.0	7'-0"	12'-6"	11'-3"	12'-6"	12'-6"	12'-6"	12'-3"	12'-6"	12'-6"	12'-6"	12'-6"	12'-6"
60.0	7'-0"	12'-6"	10'-11"	12'-6"	12'-6"	12'-6"	11'-11"	12'-6"	12'-6"	12'-6"	12'-6"	12'-6"
65.0	7'-0"	12'-6"	10'-8"	12'-1"	12'-6"	12'-6"	11'-7"	12'-6"	12'-6"	12'-6"	12'-6"	12'-6"
70.0	7'-0"	12'-6"	10'-5"	11'-6"	12'-6"	12'-6"	11'-3"	12'-6"	12'-6"	12'-6"	12'-6"	12'-6"
75.0	7'-0"	12'-1"	10'-2"	10'-11"	12'-6"	12'-6"	11'-0"	11'-11"	12'-6"	12'-6"	12'-6"	12'-6"
80.0	7'-0"	11'-6"	9'-11"	10'-6"	12'-4"	12'-6"	10'-10"	11'-5"	12'-6"	12'-6"	11'-11"	12'-6"
85.0	7'-0"	11'-0"	9'-9"	10'-2"	12'-1"	12'-6"	10'-7"	11'-0"	12'-6"	12'-6"	11'-4"	12'-6"
90.0	7'-0"	10'-7"	9'-7"	9'-10"	11'-10"	12'-5"	10'-5"	10'-8"	12'-6"	12'-2"	10'-10"	12'-6"
95.0	7'-0"	10'-2"	9'-5"	9'-6"	11'-7"	11'-11"	10'-2"	10'-4"	12'-6"	11'-9"	10'-5"	12'-6"
100.0	7'-0"	9'-10"	9'-3"	9'-3"	11'-5"	11'-6"	10'-0"	10'-1"	12'-6"	11'-5"	10'-1"	12'-6"
105.0	7'-0"	9'-6"	9'-1"	9'-1"	11'-3"	11'-2"	9'-10"	9'-10"	12'-6"	11'-1"	9'-8"	12'-6"
110.0	7'-0"	9'-3"	8'-11"	8'-10"	11'-1"	10'-10"	9'-9"	9'-7"	12'-6"	10'-9"	9'-5"	12'-6"
115.0	7'-0"	9'-0"	8'-10"	8'-7"	10'-11"	10'-7"	9'-7"	9'-5"	12'-6"	10'-5"	9'-1"	12'-6"
120.0	7'-0"	8'-9"	8'-8"	8'-5"	10'-9"	10'-3"	9'-5"	9'-3"	12'-6"	10'-2"	9'-10"	12'-6"
125.0	7'-0"	8'-6"	8'-7"	8'-2"	10'-7"	10'-0"	9'-4"	9'-1"	12'-6"	9'-11"	8'-7"	12'-6"
130.0	7'-0"	8'-4"	8'-5"	8'-0"	10'-6"	9'-9"	9'-2"	8'-11"	12'-6"	9'-9"	8'-5"	12'-6"
135.0	7'-0"	8'-2"	8'-4"	7'-9"	10'-4"	9'-7"	9'-1"	8'-9"	12'-6"	9'-6"	8'-2"	12'-6"
140.0	7'-0"	8'-0"	8'-3"	7'-7"	10'-1"	9'-4"	9'-0"	8'-7"	12'-6"	9'-4"	8'-0"	12'-6"
145.0	7'-0"	7'-10"	8'-2"	7'-5"	9'-9"	9'-2"	8'-10"	8'-6"	12'-6"	9'-2"	7'-10"	12'-6"
150.0	7'-0"	7'-8"	8'-1"	7'-4"	9'-5"	9'-0"	8'-9"	8'-4"	12'-6"	8'-11"	7'-8"	12'-6"
155.0	7'-0"	7'-6"	8'-0"	7'-2"	9'-2"	8'-10"	8'-8"	8'-3"	12'-5"	8'-9"	7'-6"	12'-6"
160.0	7'-0"	7'-4"	7'-11"	7'-0"	8'-10"	8'-8"	8'-7"	8'-1"	12'-2"	8'-8"	7'-5"	12'-6"

SCHEDULE 2c
WALL MOUNTING
MAX. SPAN (FT) FOR END AND INTERIOR MULLIONS FOR A GIVEN A.S.D. DESIGN PRESSURE RATING (P.S.F.), & AND 7'-0" MAX. MULLION SPACING (FT) *

MAX. A.S.D. DESIGN PRESSURE RATING (p.s.f.)	MAXIMUM MULLION SPACING (ft) *	MAXIMUM MULLION SPAN (FT)									
		(G) 4"x6"x1/4" MULLION				(G1) 4"x8"x1/4" MULLION				(G2) 4"x7"x1/4" THICK (3/8" FLANGE) MULLION	
		ORIENTATION #1 (⟺)†		ORIENTATION #2 ([])†		ORIENTATION #1 (⟺)†		ORIENTATION #2 ([])†		ORIENTATION #2 ([])†	
		END	INTERIOR	END	INTERIOR	END	INTERIOR	END	INTERIOR	END	INTERIOR
30.0	7'-0"	12'-6"	12'-6"	12'-6"	12'-6"	12'-6"	12'-6"	12'-6"	12'-6"	12'-6"	12'-6"
35.0	7'-0"	12'-6"	12'-6"	12'-6"	12'-6"	12'-6"	12'-6"	12'-6"	12'-6"	12'-6"	12'-6"
40.0	7'-0"	12'-6"	12'-6"	12'-6"	12'-6"	12'-6"	12'-6"	12'-6"	12'-6"	12'-6"	12'-6"
45.0	7'-0"	12'-6"	12'-0"	12'-6"	12'-6"	12'-6"	12'-6"	12'-6"	12'-6"	12'-6"	12'-6"
50.0	7'-0"	12'-6"	11'-7"	12'-6"	12'-6"	12'-6"	12'-6"	12'-6"	12'-6"	12'-6"	12'-6"
55.0	7'-0"	12'-6"	11'-3"	12'-6"	12'-6"	12'-6"	12'-3"	12'-6"	12'-6"	12'-6"	12'-6"
60.0	7'-0"	12'-6"	10'-11"	12'-6"	12'-6"	12'-6"	11'-11"	12'-6"	12'-6"	12'-6"	12'-6"
65.0	7'-0"	12'-6"	10'-8"	12'-1"	12'-6"	12'-6"	11'-7"	12'-6"	12'-6"	12'-6"	12'-6"
70.0	7'-0"	12'-6"	10'-5"	11'-6"	12'-6"	12'-6"	11'-3"	12'-6"	12'-6"	12'-6"	12'-6"
75.0	7'-0"	12'-1"	10'-2"	10'-11"	12'-6"	12'-6"	11'-0"	11'-11"	12'-6"	12'-6"	12'-6"
80.0	7'-0"	11'-6"	9'-11"	10'-6"	12'-4"	12'-6"	10'-10"	11'-5"	12'-6"	11'-11"	12'-6"
85.0	7'-0"	11'-0"	9'-9"	10'-2"	12'-1"	12'-6"	10'-7"	11'-0"	12'-6"	11'-4"	12'-6"
90.0	7'-0"	10'-7"	9'-7"	9'-10"	11'-10"	12'-5"	10'-5"	10'-8"	12'-6"	10'-10"	12'-6"
95.0	7'-0"	10'-2"	9'-5"	9'-6"	11'-7"	11'-11"	10'-2"	10'-4"	12'-6"	10'-5"	12'-6"
100.0	7'-0"	9'-10"	9'-3"	9'-3"	11'-5"	11'-6"	10'-0"	10'-1"	12'-6"	10'-1"	12'-6"
105.0	7'-0"	9'-6"	9'-1"	9'-1"	11'-3"	11'-2"	9'-10"	9'-10"	12'-6"	9'-8"	12'-6"
110.0	7'-0"	9'-3"	8'-11"	8'-10"	11'-1"	10'-10"	9'-9"	9'-7"	12'-6"	9'-5"	12'-6"
115.0	7'-0"	9'-0"	8'-10"	8'-7"	10'-11"	10'-7"	9'-7"	9'-5"	12'-6"	9'-1"	12'-6"
120.0	7'-0"	8'-9"	8'-8"	8'-5"	10'-9"	10'-3"	9'-5"	9'-3"	12'-6"	9'-10"	12'-6"
125.0	7'-0"	8'-6"	8'-7"	8'-2"	10'-7"	10'-0"	9'-4"	9'-1"	12'-6"	8'-7"	12'-6"
130.0	7'-0"	8'-4"	8'-5"	8'-0"	10'-6"	9'-9"	9'-2"	8'-11"	12'-6"	8'-5"	12'-6"
135.0	7'-0"	8'-2"	8'-4"	7'-9"	10'-4"	9'-7"	9'-1"	8'-9"	12'-6"	8'-2"	12'-6"
140.0	7'-0"	8'-0"	8'-3"	7'-7"	10'-3"	9'-4"	9'-0"	8'-7"	12'-6"	8'-0"	12'-6"
145.0	7'-0"	7'-10"	8'-2"	7'-5"	10'-1"	9'-2"	8'-10"	8'-6"	12'-6"	7'-10"	12'-6"
150.0	7'-0"	7'-8"	8'-1"	7'-4"	10'-0"	9'-0"	8'-9"	8'-4"	12'-6"	7'-8"	12'-6"
155.0	7'-0"	7'-6"	8'-0"	7'-2"	9'-10"	8'-10"	8'-8"	8'-3"	12'-5"	7'-6"	12'-6"
160.0	7'-0"	7'-4"	7'-11"	7'-0"	9'-9"	8'-8"	8'-7"	8'-1"	12'-2"	7'-5"	12'-6"

* MAXIMUM MULLION SPACING SHALL BE SUCH THAT MAX. ALLOWABLE SLAT SPAN FOR THAT A.S.D. DESIGN PRESSURE RATING SHALL NOT BE EXCEEDED.

† MULLION ORIENTATION IS AS SEEN FROM THE OUTSIDE (EXTERIOR) OF PRODUCT.

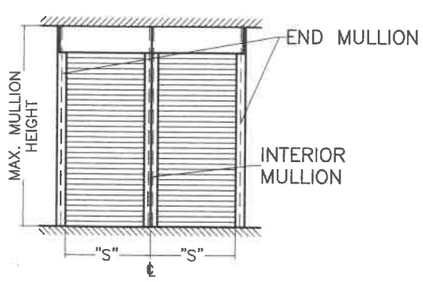

MULLION SPACING: "S"

FLORIDA BUILDING CODE (Non High Velocity Hurricane Zone)

WALTER A. TILLIT JR. LICENSE No. 44167 STATE OF FLORIDA PROFESSIONAL ENGINEER

6/11/2020

P.E. SEAL/SIGNATURE/DATE

© 2020 TILTECO INC.

TILTECO INC.
TILLIT TESTING & ENGINEERING COMPANY
6355 N.W. 36th. St., Ste. 305, VIRGINIA GARDENS, Fl. 33166
Phone : (305)871-1530 . Fax : (305)871-1531
e-mail: tilteco@aol.com
CA-0006719
WALTER A. TILLIT Jr. P.E.
FLORIDA Lic. # 44167

Nautilus
Rolling Shutter System

EXPERT SHUTTER SERVICES INC.
668 S.W. WHITMORE DRIVE
PORT ST. LUCIE, FL. 34984
PHONE: (800) 749-9056 , FAX: (772) 871-0990

REV. No	DESCRIPTION	DATE	REV. No	DESCRIPTION	DATE
1	OLD 17-244	06/8/2020	4		
2			5		

DRAWN BY: M.P.

06/8/2020 DATE

20-064 DRAWING No